REB 1 REB 3 REB 5 REB 6
REB 8 REB 10 REB 12 REB 16

Manually Operated Electronic Speed Controller – Single Phase

For all applications using suitably specified single-phase induction motor fans

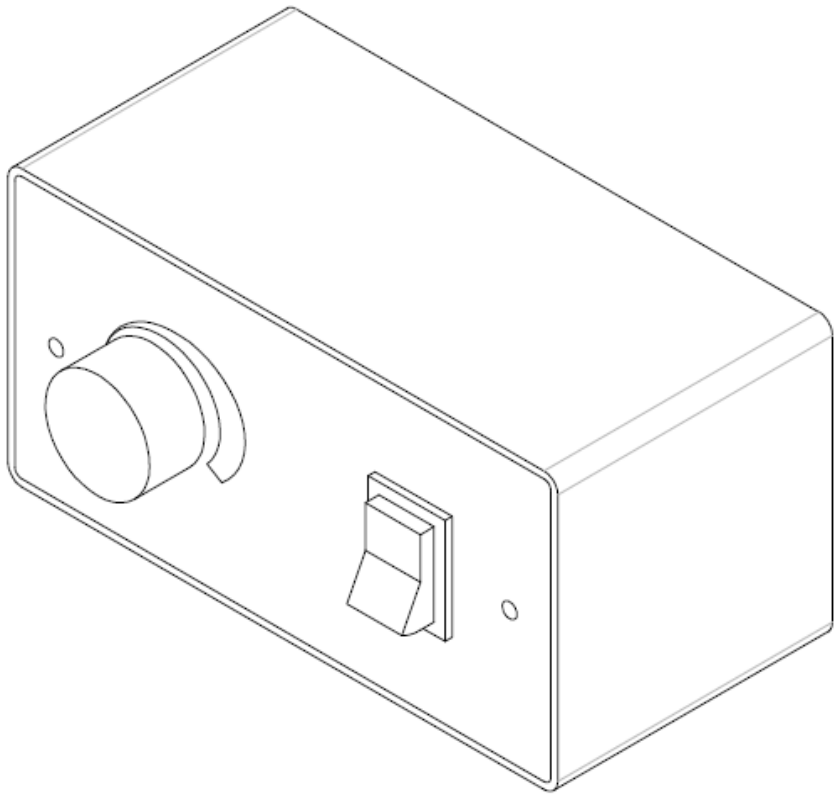

GENERAL

The controllers utilise triac cutting techniques. By adjustment of a rotary knob, the user may vary the available voltage to the motors which have been approved by the manufacturer for speed control by triac.

WARNING!

Mains voltage is present. It is the responsibility of the user to ensure compliance with the Health and Safety at Work Act, 1974.

CAUTION

1. Isolate mains supply before connecting.
2. This unit must be earthed.
3. All electrical connections should be made by a qualified electrician.
4. All wiring must be in accordance with current wiring regulations. The control should be provided with a separate double pole isolator switch.

SPECIFICATION

1. The controller is designed for continuous operation with the maximum rated current load listed in table 1 at 40° C. ambient on single phase 230 Volts ~ 50Hz supply.
2. The normal equipment temperature range is -20°C to +40°C.
3. The unit meets the EMC requirements of EN 61800-3:1997 and EN61000-3:2006
4. The controller is housed in an enclosure that is suitable for the current rating and is IP42 rated.

Table 1

Model Number	Rated Current (Amps)	Fuse Size
REB 1	1 Amp	20mm ceramic 3.5 Amp “F” Type
REB 3	3 Amps	20mm ceramic 5.0 Amp “F” Type
REB 5	5 Amps	32mm ceramic 10.0 Amp “F” Type
REB 6	6 Amps	32mm ceramic 10.0 Amp “F” Type
REB 8	8 Amps	32mm ceramic 8.0 Amp “T” Type
REB 10	10 Amps	32mm ceramic 10.0 Amp “T” Type
REB 12	12 Amps	32mm ceramic 12.5 Amp “T” Type
REB 16	16 Amps	32mm ceramic 16.0 Amp “T” Type

Note: - Fuses in the units are for protection of the controller wiring and components in case of short circuit. They do not offer motor overload protection.

INSTALLATION

1. Check that the number, size and the speed of the fans can be safely controlled by this controller.
2. Install in a dry sheltered position. Leave an air space of not less than 150mm around the controller to allow cooling air to flow freely. Do not install in close proximity to other heat sources. The maximum ambient temperature for the controller must not exceed 40°C.
3. Remove front cover of the controller by removing cover fixing screws. This provides access to the terminals and mounting holes that are under the lid. The gasket (REB 8, REB 10, REB 12 and REB 16 only) prevents the ingress of moisture and dust. If more than one fan needs to be controlled, the connections can be made in parallel to a junction box (by others).
4. Two types of fan motor are currently used. One has terminal designations L and N and either a pre-wired capacitor or a separate capacitor where particular attention must be paid to the connections to the capacitor (wiring Diagrams 6 and 8). The second type has terminals marked U,V,W,X,Y,Z and a capacitor fitted to the motor. In each case the connections must be as shown in the wiring diagram.
5. Should the current rating of the fuse in the controller exceed that of the wiring of the fan(s) circuit(s), each fan should be protected independently. If individual protection for each fan is being employed, then this should be situated in each common line (the supply from controller terminal U2) only.
6. If the controller is intended to control multiple fans, then those fans must be of the same model/size.
7. All cable entries provided should be used. Any left unused should be blanked and left in a safe condition.

WIRING THE MOTOR

8. Use table 2 on page 4 of this booklet to establish which wiring diagram should be followed when connecting popular S&P fan models to the correct controller. For fans not listed, refer to diagram 8. IF IN DOUBT, ASK! Note that the table is for dedicated fan control only (I.e. one fan per controller). Multiple fan control is possible; however table 2 will no longer apply and notes #1, #5 and #6 above must be followed.
9. Where fan is 2-wire control (I.e. only live and neutral at fan terminal box), then omit the connection from the controller AUX terminal and connect links as per the diagram on the fan.
10. Check that the unit mountings and electrical connections are secure and in accordance with the wiring diagrams on pages 5 and 6 of this booklet.

Table 2

Electronic Speed Controller	Fan Model				Wiring Diagram
REB 1	HCBB/4-250/H	HCBB/4-315/H	HCBB/6-355/H	HCBB/6-400/H	1
	HXBR/2-250	TXBR/2-250			6
REB 3	HCBB/4-355/H	HCBB/4-400/H	HXBR/4-400	HXBR/4-450	1
	HXBR/6-400	HXBR/6-450	HXBR/6-500	HXBR/6-560	
	HCBB/4-450/H	HCBB/6-450/H	HCBB/6-500/H	HCBB/6-560/H	2
	HXBR/4-250	HXBR/4-315	HXBR/4-355	TXBR/4-315	6
	TXBR/4-355				
REB 5	HXBR/4-500	HXBR/6-630			1
	HCBB/4-500/H	HCBB/6-630/H			2
REB 6	TCBB/4-250/H	TCBB/4-315/H	TCBB/4-355/H	TCBB/4-400/H	4a
	TCBB/6-355/H	TCBB/6-400/H			
	TCBB/4-450/H	TCBB/4-500/H	TCBB/4-560/L	TCBB/6-450/H	7a
	TCBB/6-500/H	TCBB/6-560/L	TCBB/6-560/H	TCBB/6-630/L	
	TCBB/6-630/H	TXBR/4-400	TXBR/4-450	TXBR/4-500	
	TXBR/6-450	TXBR/6-560	TXBR/6-630	TCBBx2/4-450	
REB 8	HCBB/4-560/H				3
	TCBBx2/4-500				7a
REB 10	TCBBx2/4-500E				7a
REB 12	TCBBx2/4-560L				7a
REB 16	TCBBx2/4-560				7a
fans not recommended for speed control	HCBB/4-630/H	HCBB/6-710/H	TCBB/4-560/H	TCBB/4-630/L	n/a
	TCBB/6-710/L	TCBB/6-710/H	HXBR/4-560	HXBR/4-630	
	HXBR/6-710	TXBR/4-560	TXBR/4-630	TXBR/6-710	
	TCBBx2/4-630				

Note:-

These wiring diagrams refer to standard form products only:-

Plate Axial Fans – Form A; airflow direction motor over impeller

Cased Axial Fans – Form B; airflow direction impeller over motor

WIRING DIAGRAMS FOR ELECTRONIC SPEED CONTROLLERS (SINGLE PHASE 230V ~ 50Hz)

L – Supply Live 230V 50Hz

N – Supply Neutral

U1 – Motor Control Variable Neutral

U2 – Motor Live 230V ~ 50Hz

A – Auxiliary Permanent Neutral

E – Motor Supply Earth (E)

WIRING DIAGRAM 1

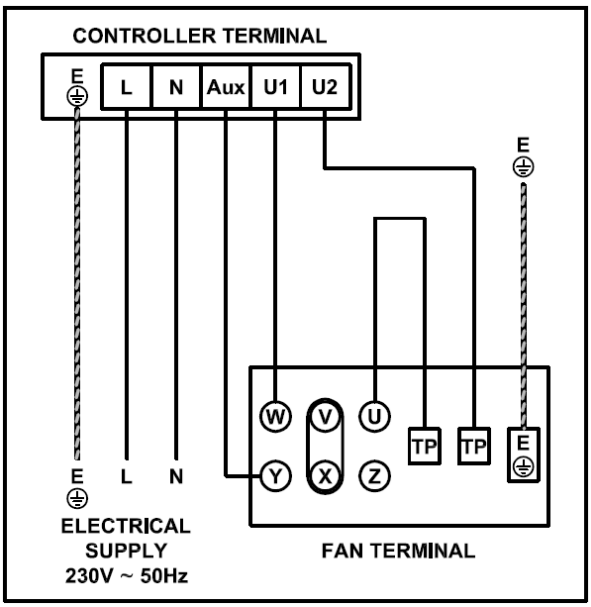

WIRING DIAGRAM 2

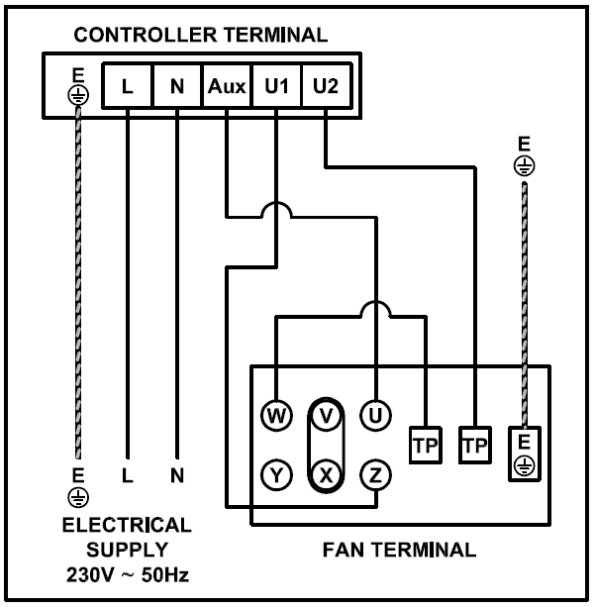

WIRING DIAGRAM 3

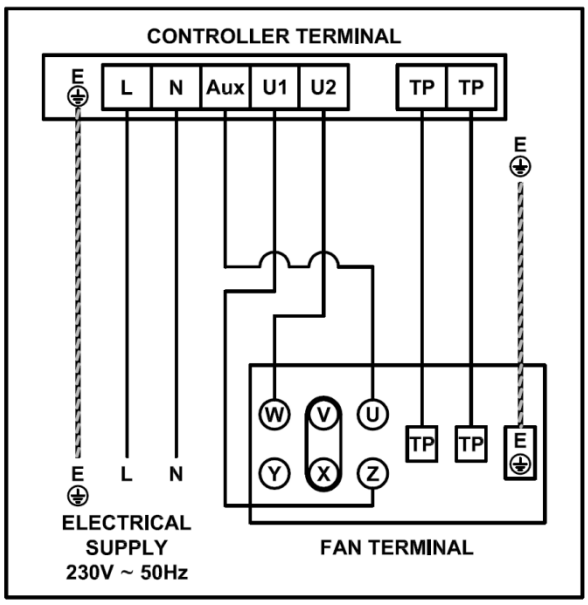

WIRING DIAGRAM 4a

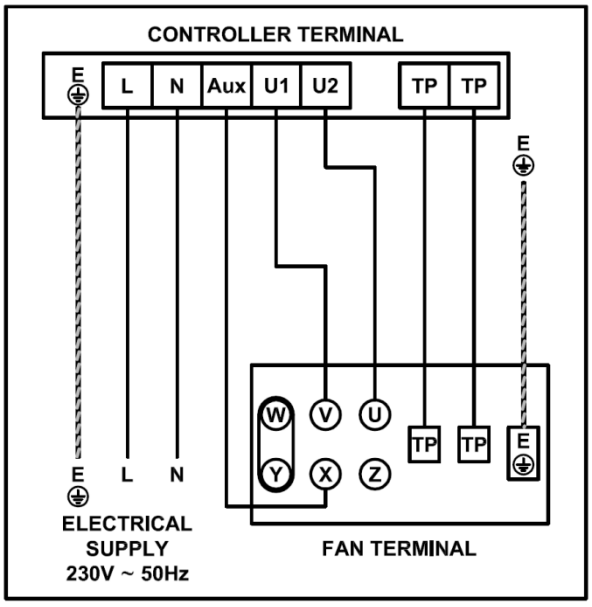

WIRING DIAGRAM 6 –

<u>IMPORTANT NOTE</u> FAN MOTOR HAS AN EMBEDDED THERMAL PROTECTION TRIP AND CASED-AXIAL AND IN-LINE FANS **<u>MUST</u>** BE WIRED VIA A MANUAL RESET THERMAL OVERLOAD FACILITY.

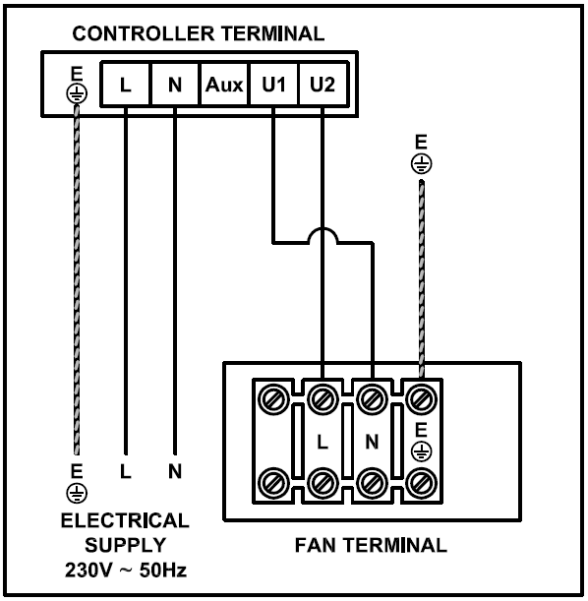

WIRING DIAGRAM 7a

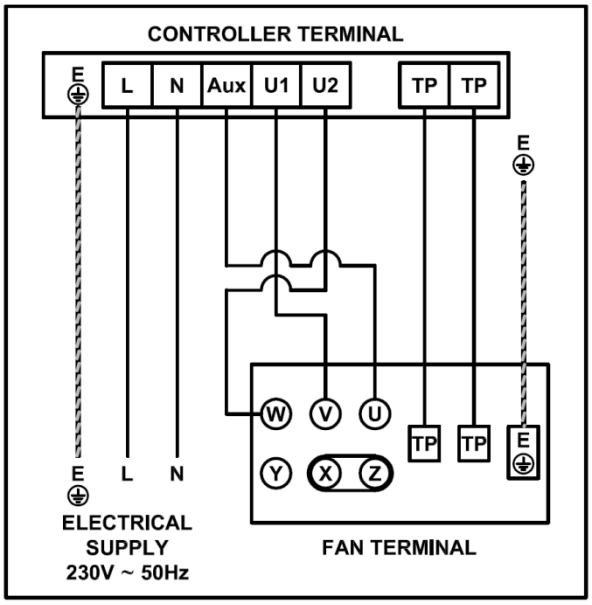

WIRING DIAGRAM 8 –

For use with "Other" S&P Fans where 3-wire control is NOT possible, the controller must be used as a 2-wire regulator. Please note that controller terminal AUX is unused.

IMPORTANT NOTE – CASED-AXIAL AND IN-LINE FANS **<u>MUST</u>** BE WIRED VIA A MANUAL RESET THERMAL OVERLOAD FACILITY.

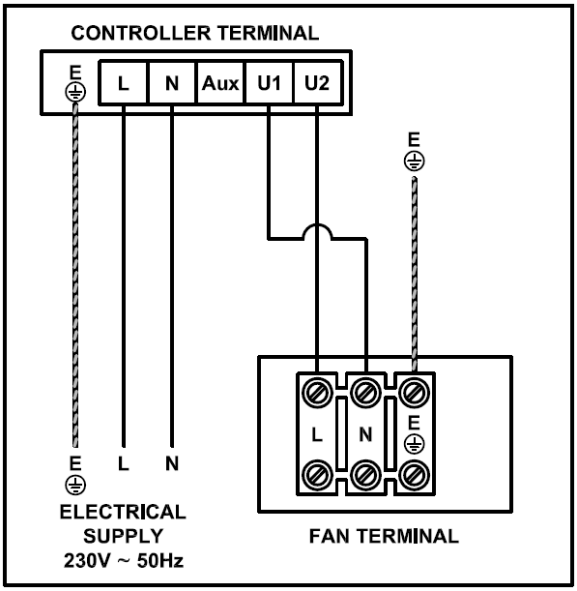

OPERATING INSTRUCTIONS

11. Switch on the controller by pressing down the Red ON/OFF Rocker Switch which will illuminate when switched on.
12. REB 6, REB 8, REB 10, REB 12 and REB 16 only:- The controller has a boost start function and when switched on will start the fan running on full speed for approximately 10 seconds. Thereafter the speed will be determined by the position of the control knob.
13. Rotating the control knob fully clockwise will increase the speed of the fan from a factory pre-set minimum to full speed with infinitely variable control.
14. The minimum speed is pre-set and does not normally need adjusting.
15. REB 6, REB 8, REB 10, REB 12 and REB 16 only:- The controller has a thermal overload relay (terminals are designated TP) controlled by thermal protectors in the fan(s). When the fan thermal prtectors trip, (terminals in the fan are also designated TP), the relay switches the controller off to prevent the fan starting automatically in the event of the thermal protector(s) cooling and making the circuit again. When this happens the red trip light switch is illuminated. To reset push the reset button positioned near to the trip light.
16. IMPORTANT NOTE – REB 1, REB 3 and REB 5 only:- The controller does NOT have a thermal overload relay and as a consequence the common (U2 – motor live 230V) conductor is shown on the wiring diagrams routed via the thermal protector(s) in the fan(s) (terminals in the fan are designated TP). In the event of the thermal protectors overheating, the power to the motor is cut; however upon the fan sensors cooling then the fan motor can remain live. To comply with European legislation EN 60335-2-80:2005, when connected to REB 1, REB 3 or REB 5 controllers, in-line duct fans which incorporate self-resetting thermal protectors must be separately protected from automatic re-start.

TROUBLESHOOTING

17. **If your fan does not start (REB 6, REB 8, REB 10, REB 12 and REB 16 only) –** ensure that the thermal protection (TP) relay has been correctly wired to the fan thermal sensors.
18. **If your speed controller does not appear to vary the fan speed.** The voltage regulation function can be checked by measuring for a change in Voltage across terminals U1 and U2 with the fan connected. THERE WILL BE NO MEASUREABLE CHANGE IN VOLTAGE IF THE FAN IS NOT CONNECTED. The fan may be replaced with an alternate load such as a lamp which will also provide a visual check that there is a variable voltage at the controller output.
19. **To ensure that the fan is operating correctly.** The controller could be temporarily removed from the system by wiring the fan directly to an isolator. Please note that the wiring will differ to those diagrams contained herein and that the wiring diagram in the instruction booklet that was supplied with the fan should be followed instead.

EC DECLARATION OF CONFORMITY

Herewith we declare that the fan speed controller designated below, on the basis of its design and construction in the form brought onto the market by us is, in accordance with the relevant EC Council Directives on Electromagnetic Compatibility. If alterations are made to the apparatus without prior consultations with us, this declaration becomes invalid. We further declare that the equipment identified below may be intended to be assembles with other equipment/machines to

constitute machinery, which shall not be put into service until the assembled machinery has been declared in conformity with the provisions of these relevant EC Council Directives.

DESIGNATION OF EQUIPMENT

Relevant EC Council Directives, Electromagnetic Compatibility Directive (89/336/EEC.) Applied Harmonised standards in particular BS EN 50081-1:1992, BS EN50082-1:1998, BS EN 61000-3-2: 1995, BS EN 61000-3-3:1995

GUARANTEE

S&P Limited Warranty

24 (TWENTY FOUR) MONTH PRODUCT WARRANTY

Soler and Palau Limited warrants that the REB 1, REB 3, REB 5, REB 6, REB 8, REB 10, REB 12 and REB 16 fan speed controllers will be free from defective materials and workmanship for the period of 24 (twenty four) months from the date of original purchase. In the event that we find any part is defective the product will be repaired or at the company's discretion, replaced without charge provided that the product has been installed in accordance with the enclosed instructions and all applicable standards and national and local building standards.

IF CLAIMING UNDER WARRANTY

Please return the completed product, carriage paid, to your local authorized distributor. All returns must be accompanied by a valid Invoice of Sale. All returns must be clearly marked "Warranty Claim", with an accompanying description stating the nature of the fault.

THE FOLLOWING WARRANTIES DO NOT APPLY

Damages resulting from improper wiring or installation.

Damages resulting when using the controller with fans/motors other than those supplied and manufactured by the Soler and Palau Group of Companies.

Removal or alteration of the Soler and Palau data plate label.

WARRANTY VALIDATION

The end user must keep a copy of the Invoice of Sale to verify a purchase date.

Soler & Palau Limited

S&P House, Wentworth Road, Ransomes Europark,
Ipswich, Suffolk, IP3 9SW.
Tel. 08454 700 074
Fax 08454 700 075
sales@solerandpalau.co.uk
www.solerandpalau.co.uk

REV03