LIMPLEY STOKE
COMMUNITY BENEFIT SOCIETY

THE HOP POLE INN

Phase 3 Planning and Listed Building Consent Application



Design and Access Statement

&

Planning Policy Statement

CONTENT

1.0 - DESIGN AND ACCESS STATEMENT

1.1 - Summary Proposals

1.2 - Proposal Documents

1.3 - Location and Site

1.4 – History

1.5 – Existing Buildings

1.6 - Brief Objectives

1.7 - Design Principles

1.8 - Proposals - Use, Layout, Form, Scale and Mass

2.0 - PLANNING STATEMENT

2.1 - Pre-Application Advice

2.2.0 – Community Objective

2.2.1 - Economic Development

2.2.2 - Climate Change and Heritage Strategy

2.2.3 - Arboricultre

2.2.4 - Ecology

2.3 - Heritage and the Historic Environment

2.4 - WILTSHIRE CORE POLICY

DESIGN AND ACCESS & PLANNING STATEMENT

Address:
The Hop Pole Inn
Woods Hill
Lower Stoke
Limpley Stoke
Bath
BA2 7FS

Property Use
UPRN – 100121108997 – Commercial, Retail, Pubs, Bars
UPRN – 010090513655 – Staff, Accommodation, Dwelling, Flat

Community Asset – 2013/0026
Date of Listing – 11/11/2013

Relevant Planning History:

PL/2023/03629 – Provisions to manage groundwater

PL/2023/00755 – Envelope Repairs

PL/2023/02607 – Internal reordering

1- W/79/00078/HIS
Approved – Erection of a pre-fabricated building for bottled beer and mineral storage
13th March 1979.

Listed Buildings
Ref – 314543
Listing – GII

HER
Record Number – MWI43709

1.0 - DESIGN AND ACCESS STATEMENT

1.1 - Summary Proposals

Phase Three of the well-publicised work by the Community to 'Save the Hop Pole'. This phase is largely focused on the elements to the rear of the main building and the garden.

Importantly, ***there is no change of use***. The proposals are specifically concerned with the alteration to and extension of an existing building. Statements about operational capacity identify minimum requirement. ***These minimum capacities are being delivered though the utilisation of existing space and not an increase***. The proposed extensions are for enhanced facilities outside the four walls of the historic building. This minimises heritage impact while also providing WC, storage and cooking facilities that, in their existing / previous form were far below acceptable standards.

Following over 12 months of design development and engagement with the Planning Authority, stakeholders, funders including the Department for Levelling Up, operators and professional consultants the Limpley Stoke Community Benefit Society have resolved proposals for the new rear elements of the Hop Pole Inn. The proposals are for the renewal of existing accommodation to a form and standard that meets the needs of the community, achieves the minimum commercially viable footprint and allows for the long-term sustainable future of the pub as a community owned asset and resource.

1.2 - Proposal Documents

HBA Drawings – Existing and Consented Works

- 001 – Site Location Plan – 1:1250 – A4
- 102 - Block Plan – 1:200 – A3
- 200 – Ground Floor Plan Existing / Consented – 1:50 - A2
- 210A –South Elevation Existing / Consented – 1:50 @ A3
- 211A –East Elevation Existing / Consented – 1:50 @ A3
- 212A –North Elevation Existing / Consented – 1:50 @ A3

DBP Drawings – Proposed Works

- P100 – Roof and Site Plan – 1:100 @ A1
- P101- Demolitions – 1:50 @ A1
- P401 – Ground Floor Plan – Proposed – 1:50 @ A1
- P405 – North Elevation – Proposed – 1:50 @ A1
- P406 – East Elevation – Proposed – 1:50 @ A1
- P407 – South Elevation – Proposed – 1:50 @ A1
- P408 – West Elevation – Proposed – 1:50 @ A1
- P410 – Site Section – Proposed – 1:50 @ A1
- P411 – Building Section 1 – Proposed – 1:50 @ A1
- P412 – Building Section 2 – Proposed – 1:50 @ A1
- P415 – PV Array and Garden Building – 1:50 @ A1
- P416 – PV Array and Garden Building – 1:50 @ A1
- P417 – Bar Proposal – 1:20 @ A1

- P418 – WC Extension Wall Construction Section - 1:10 @ A1

Greenbook - Landscape Proposals

- LANDP01 – 1:100 @ A1

Reports

- Johns Associates – Bat Report 30th Jan 2023
- Arbtech – Aboricultural Survey – 25th April 2022
- Acoustic Report – *Pending from Acoustic Consultant Ltd*

Statements

- Heritage Significance Statement – Andrew Foyle rev 2.0 Nov 23
- Heritage Impact Assessment – LSCBS Nov 23
- Design and Access & Planning Statement – LSCBS Nov 23 (This document)
- The Hop Pole – Renovation Project Brief V2 – 14 May 2023
- Business Plan for the Hop Pole Inn, Limpley Stoke- October 2023

1.3 - Location and Site

Limpley Stoke is situated in the western Wiltshire Green Belt and the Cotswold Area of Outstanding Natural Beauty midway between Bath and Bradford-on-Avon, in the county of Wiltshire. The Hop Pole Inn has served as a pub for the village since at least 1841, and probably significantly before that. For many decades it was one of two pubs in the village, the other being the Rose and Crown sitting just below the A36 Bath to Warminster Road higher up the valley. However the Hop Pole is much more central, being situated on Lower Stoke, the lowest road along the west side of the Avon valley through the village, and very close to the historic centre the Manor House, former textile mill and the Limpley Stoke Brewery were all within 100 metres.

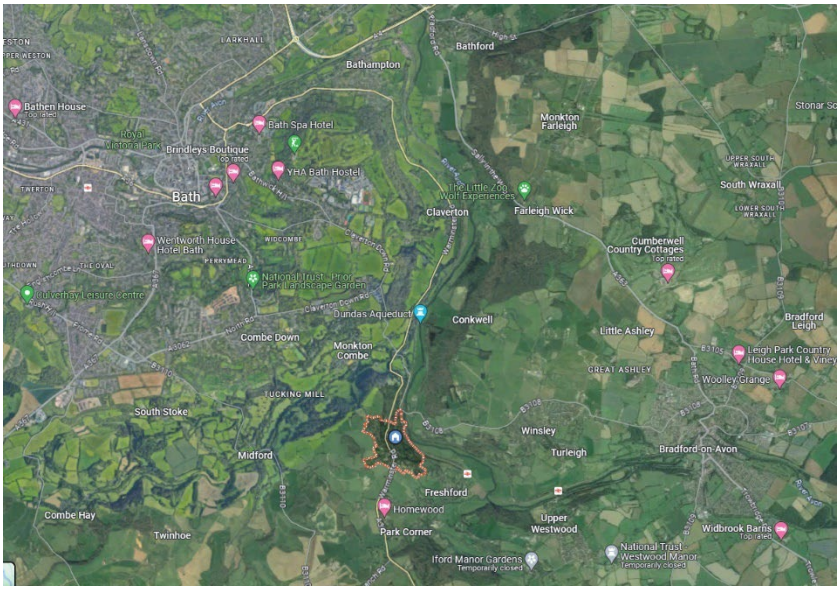

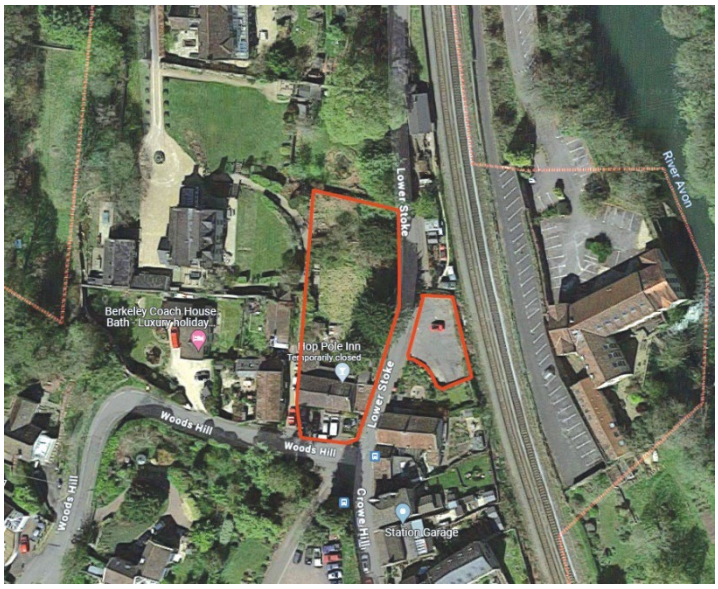

1.4 – History

Refer to the 'Heritage Significance Statement'.

1.5 – Existing Buildings

The existing pub is formed of elements added over centuries with the core building likely a Hall House dating to the 1500s. The building has the form of a hall house which has evolved over many phases.



The main building is of bath stone set in earth mortar with a red clay roman tile roof of 1880. The east cellar is likely late 1700s with a matching roof. The windows are described by stone lintels, mullions and cills some dating from the 1600s and with similar detailing from the Georgian and late Victorian periods. The windows are of iron and steel, restored and reinstated as part of ongoing works approved under cover of previous planning and listed building consent application.



To the rear are a range of structures including:

- Kitchen Block – 1970s concrete blockwork beneath a roman tile roof of 1880 (demolished by agreement with Wiltshire due to concerns of safety)
- Block built shed timber clad – approved under 1970s application.
- Smoking room - built of bath stone, coped gables, a small chimney on the east gable and a pair of sash windows overlooking the garden. Roof pitch is aligned east west and lined in double roman.
- Flat roofed, white painted, cement rendered block built Male WC block c.1950.

The proposals for Phase 1 and Phase 2 have focused on the conservation and repair of the main building. This work has, by necessity and good practice, adopted conservation methods to conserve this part of the pub, the lower walls of which are at least 500 years old.



Front Elevation – November 2023



Rear Elevation – August 2022

1.6 - Brief Objectives

The Hop Pole Inn is a community owned building that is to be repaired, restored, renovated and extended as an attractive prospect for a tenant landlord.

The front building which makes us the historic core is to be renovated to achieve low energy in operation. The works will include the repair and enhancement of the full envelope.

The project delivery is defined by available funding. It is to be delivered in three phases:

Phase One – envelope, repair and thermal enhancement of the roof. Contractor lead with volunteer support where viable.

Phase Two – envelope enhancement, internal repairs and installation of building services. Contractor lead. Skilled volunteers to help minimise capital costs.

Phase Three – rebuilding of rear elements to achieve low energy in operation. Kitchen to be a distinct thermal element for energy use and operational purposes. Substantially community built.

Refer to The Hop Pole – Renovation Project Brief V2 – 14 May 2023 for more details.

1.7 - Design Principles

This is a community owned and community lead project that is being funded and delivered by the community. Key documents to consult include: 'The Hop Pole – Renovation Project Brief V2 – 14 May 2023' and 'Business Plan for the Hop Pole Inn, Limpley Stoke- October 2023'.

The scheme is seeking the sustainable renovation of the existing Pub to address decades of underinvestment. This has lead to the extensive deterioration of the fabric that has places a substantial burden on the renovation works. The outcome of the past year of work has been the refinement of a brief, business plan and set of proposals that identify the most efficient and sustainable route to reopen the pub as a community owned business and hub.

Core design principles:

- Improve access to and use of the garden
- Increase and enhance the ecology of the garden
- Develop proposals that use low carbon materials
- Engage local manufacturers and suppliers to support the repair, renovation and extension of the building
- Adopt robust sustainability principles and seek a design that will allow for low energy consumption in operation
- Resolve designs for building that reduce maintenance demand and allow for ease of operation
- Maintain the buildings special significance and share heritage values though sensitive design

1.8 - Proposals - Use, Layout, Form, Scale and Mass

Phase 3 is seeking the renewal of the existing elements to the rear of the building. These are summarised as:

- Renewal of the kitchen & female WC block (1880s / 1930s / 1970s)
- Renewal of the male WC block (1950s)
- Renewal of the smoking room (1880s)
- Regrading of the rear landscape with new hard and soft planting
- New structure to carry photovoltaic cells to provide a third of general power to the pub
- Unheated storage an accommodation beneath the PV array
- New landscape scheme to the front

Use – the elements will provide for critical facilities that enable the operation of the pub. The kitchen will be contained in a purpose-built building. The WCs will be located along the west edge, set below the existing stone built boundary wall. A new garden structure will allow for storage and the PV array equipment.

Layout – The new buildings are set to the east and west edges of the rear. This forms a courtyard space that can be accessed directly from the main building. This form reflects the historic evolved footprint at the rear. The rear courtyard layout will improve accessibility into the garden and will allow natural light to penetrate the main building. The new garden building is located at the north end of the garden to maximise the solar potential for the PV array and the beneficial use of the garden for patrons and the community.

Form, Scale and Mass – The new elements are all set into the ground, addressing the historic issue of level change at the rear of the building. Step free access and circulation is a core requirement to improve use.
The buildings are of simple, box like form with flat roofs necessitated by the plant for the kitchen extract. The flat roofs allow the building to reduce the visual impact on the main 'hall house' form of the pub.
The new elements are articulated with stone gables addressing the garden. Behind these gables the timer clad, highly insulated boxes are discrete, formed to capture space and articulated to allow the building to step into the landscape. The buildings form avoids conflict with both trees and creating a wholly new junction with the main building. The intention is to create a discrete addition that speaks also unlocks the latent potential of the wonderful historic building.
The reduced level and flat roofs allow the mass of the new elements to appear smaller than that of the existing rear elements.

Materials – The materials have been chosen to blend in with the existing building and setting.

Gables - Bath stone ashlar from Stoke Ground (a supporter of the project) will be used for the gables.

Walls - Timber cladding will create a lighter appearance to the main body of the walls.

Canopy - A standing seam canopy will help articulate the transition from the walls to the flat roofs reducing the possible severity that can come with a parapet.

Roof – The roofs will be flat to allow for plant to be located out of sight.

Windows and Doors - The window to the extension will be double glazed aluminium, contrasting with the historic metal windows but clearly in keeping with the architecture of the extension.

Rainwater Goods – Aluminium to match the colour of the goods used on the main building.

2.0 - PLANNING STATEMENT

GENERAL POLICY

Green Belt – West Wiltshire - GB1 – See NPPF –para 137 and 143
AONB – Cotswolds - https://landscapesforlife.org.uk/about-aonbs/aonbs/cotswolds
Advertisement Control - W/ADVERT/07/03 – Description - Special Advertisement Control Area: West Wiltshire District Council Area of Special Control Order 1993 Town and Country Planning (Control of Advertisements) Regulations 1992

Relevant policies thought include:
Core Policy 1: Settlement Strategy;
Core Policy 2: Delivery Strategy;
Core Policy 7: Spatial Strategy – Bradford on Avon Community Area;
Core Policy 35: Existing Employment Land
Core Policy 39: Tourist Development
Core Policy 41: Sustainable construction and low-carbon energy;
Core Policy 48: Supporting Rural Life
Core Policy 49: Protection of rural services and community facilities
Core Policy 50: Biodiversity and Geodiversity;
Core Policy 51: Landscape;
Core Policy 52: Green Infrastructure
Core Policy 57: Ensuring high quality design and place shaping;
Core Policy 58: Ensuring the Conservation of the Historic Environment

West Wiltshire District Local Plan (1st Alteration) Saved Policies
U1a Foul Water Disposal

National Planning Policy Framework 2021 (The Framework)
Other

- Planning Practice Guidance (PPG)
- Wiltshire Local Transport Plan 2011- 2026
- Freshford and Limpley Stoke Neighbourhood Plan 2014-2039

2.1 - Pre-Application Advice

ENQ/2022/00840 – 20 June 2022

Aspects noted that are relevant to this application:

- Note on the limitation of comments due to limited detail of proposals
- Support for the principle of repair and return to community use
- 'full and convincing' justification invited for proposed redevelopment of rear elements with regard to NPPG and NPPF definitions
- No comment made in respect of broader policy matters

August 2023

- Management of groundwater issues
- Review condition of rear structures

January 2023

- Review of a phased planning strategy to align with Community Ownership Fund requirements
- Review of proposal for renovation and extension

2.2.0 – Community Objective

Responding to Core Policy 1 and 2 and sharing our Vision.

The repair, restoration, renovation, extension and reopening of the Hop Pole Inn is the focus of Limpley Stoke Community Benefits Society and its 576 shareholders of whom over 80% live in the immediate area. Our shared objective is to create a stronger, more resilient community through the reopening of the pub as a hub for social engagement, tourism, local business, employment and as an inspiration to our community and our neighbouring communities as an exemplar for community lead sustainable development.

The scheme will achieve sustainable development through the following measures:

- complete repair of its envelope – to enable re-use
- complete thermal retrofit to enable the pub to achieve low carbon in operation
- return to use as a core part of the preservation of the villages Heritage
- renewal of rear elements to house critical facilities to ensure future business viability
- target high standards in design and energy sustainability
- space for local groups to meet and socialise as a cornerstone of good health and wellbeing
- generation of new employment opportunities via the creation of a new business (the pub last traded in 2017)
- provision of jobs within the village to mitigate the need for residents to travel for work
- provision of destination for tourists
- close links to local amenities such as the Canal
- partnering with local businesses such as Hartley Farm, Kettlesmiths, Limpley Stoke Hotel, the Galleries shop at Freshford and others.

2.2.1 - Economic Development

The provision of a small business that will support the employment of local people within the community. The business will encourage people to spend their income locally. The Hop Pole has investors from 22 counties in the UK and 10 countries worldwide. The reopened pub will attract tourists moving though the area and those who may be visiting Bath while staying locally to Limpley Stoke.

2.2.2 - Climate Change and Heritage Strategy

Historic England published its Climate Strategy on 25th March 2022. In this core document there is clear ambition for historic buildings to be an important part of addressing the climate crisis by ensuring their continued use, re-use and appropriate development. HE has set out the importance of reducing the generation of operational carbon though the retrofitting of historic buildings. This is an important development of potential when assessing what is defined as causing 'harm' to a listed building and what can be defined as heritage gain. The Heritage Statement addresses this in detail.

The long term sustainable future of the pub is to be secured though the repair and thermal renovation of the main building and the renewal of the rear, much compromised rear elements. Achieving a commercially viable building that has tolerable energy consumption and operational costs is core to the heritage strategy.

2.2.3 - Arboricultre

Refer to the Arbtech tree survey.

The proposed footprint will slightly intrude into the root protection zone of the Common Yew. A mitigation strategy will need to be developed. This is also captured under approval PL/2023/02607.

Proposals for the landscape are described within this application with the intention to greatly improve the ecological value of the garden.

2.2.4 - Ecology

'Core Policy 50: Biodiversity and Geodiversity'.

The scope of the ecological assessment has included:

- potential bat roost assessment (external and internal)
- bat emergence/re-entry surveys
- bat report including any mitigation/licence requirements
- ecological input to landscape design

It is important to note that since the first approval was granted works have been underway on site and this application comes during a continuous period of development. The site is an active construction site with much of the landscape already addressed under previous approvals.

This application includes for updated proposals lead by a Landscape Architect to enhance the ecological value of the garden proposals.

The assessment of the presence of protected species confirmed that no bats roosts were present. The rear roof was renewed in 2023 under cover of a previous approval. A copy of the bat survey previously submitted is included.

The proposals by their nature are seeking to achieve sustainable development. The landscape scheme is proposing an enhancement in the variety of planting. In line with the recommendations of the Johns Associates Report, 30th January 2023:

- Two suitable bat boxes e.g Schwegler 1FD are to be installed on the mature yew tree in pub garden (away from any lighting) to provide external potential roosting opportunities for bats.
- No artificial contractor lighting directed on the roof of the building during the works.
- Commit to creating a rear pub garden that is full of a wide range of night-scented and other flowers, shrubs, trees and grassland to attract invertebrate prey species.

2.3 - Heritage and the Historic Environment

Also refer to the 'Heritage Statement – Nov 23' and 'Heritage Impact Assessment'

NPPF Section 16 – Conserving and Enhancing the Historic Environment

The scheme is seeking to 'rescue' the Hop Pole Inn. Approvals granted to date have focused on the repair and adaption of the main building prioritising the conservation of the fabric. This application deals with matters of rebuilding and proportionate development necessary to deliver a viable pub and community hub.

NPPF para 194 – Heritage Statement – An assessment of Significance has been prepared; copy included with this submission.

A Heritage Statement is included as a separate document. It reaches the following conclusions:

Para 200 & 202 – The designs will result in less than substantial harm arising from the loss of some historic fabric to enable the construction of a new extension. This harm is substantially outweighed by the following which result in a conclusion of **'no harm'** to heritage significance.

Heritage Gain

- Sensitive conservation repair of historic fabric
- Retrofit to achieve a long-term sustainable future
- Communication of the building's significance through research and reporting
- Move to community ownership / heritage in the hands of the community

Public Benefit

- Reinstate business activity and return to use
- Improve access into and through the building (level access)
- Provide an accessible garden space
- Provide facilities for use by the community / public – WC, community space
- Implement carbon reduction measures to mitigate the use of fossil fuels

Core Policy 58: Ensuring the Conservation of the Historic Environment

Ensuring the conservation of the historic environment
Development should protect, conserve and where possible enhance the historic environment.
Designated heritage assets and their settings will be conserved, and where appropriate enhanced in a manner appropriate to their significance, including:

iii. buildings and structures of special architectural or historic interest

The potential contribution of these heritage assets towards wider social, cultural, economic and environmental benefits will also be utilised where this can be delivered in a sensitive and appropriate manner in accordance with Core Policy 57 (Ensuring High Quality Design and Place Shaping).

Heritage assets at risk will be monitored and development proposals that improve

their condition will be encouraged. The advice of statutory and local consultees will be sought in consideration of such applications.

An assessment of significance has been prepared to guide the designs and ensure they are sympathetic to the special significance of the building. *(Copy included with this submission)*

Repair, Reuse and Retrofit:

As previously stated the scheme for the repair and retrofit of the historic fabric is sought in accordance with HE's principles for conservation and in light of their recent Climate Strategy statement. Detailed analysis of the existing building fabric has informed works to date. Hygrothermal testing and PHPP modelling have enabled the proposed thermal renovation and the fabric repair of the pub to prioritise sensitive, sustainable and yet enhancing approach that reflects the best of modern conservation practice.

Avoid, Minimise, Mitigate:

The proposals seek to avoid any unnecessary change to the building interior. Where changes are proposed they seek to retain all historic fabric of medium and high significance. Change has been focused on the rear elements, the subject of the Phase 3 Planning and LBC applications.

Need for Change:

The building requires change to address fabric needs as well as an increased floor area to enable the business to achieve viable operation. The following tables offer a preliminary assessment of the proposals.

Volumes		
EXISTING	948m^3	100%
DEMOLITION	172m^3	18%
EXTENSION	248m^2	
NEW TOTAL	1060m^3	111.8% of existing
ADDITIONAL VOLUME over 948m^3	112m^3	11.8% of existing building as 1950s volume

1950s – Total Volume – 948m^3

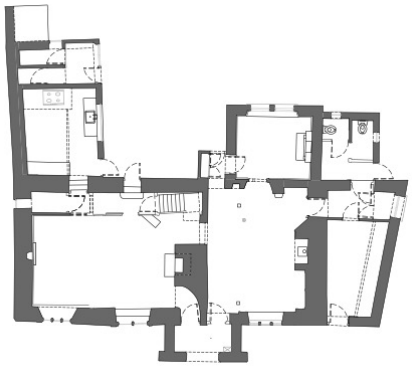

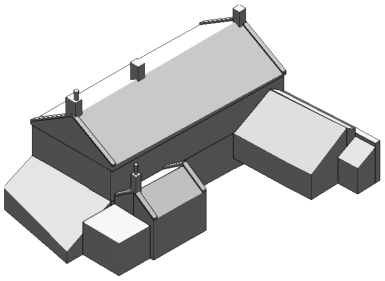

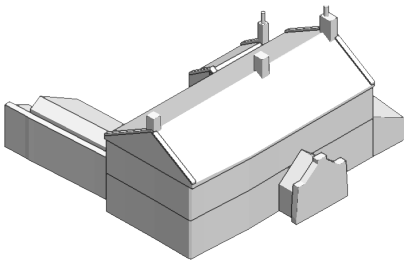

Proposed Demolition – Remove – 172m^3

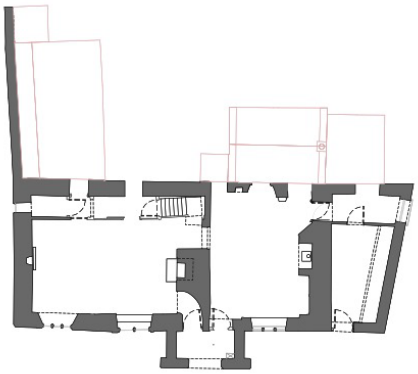

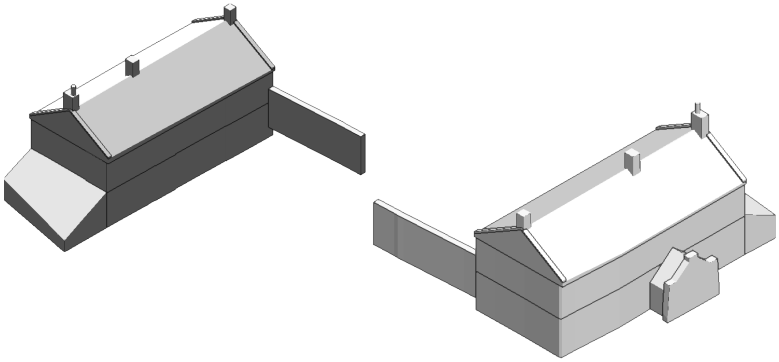

Proposed Extension – Add Back – 248m^3

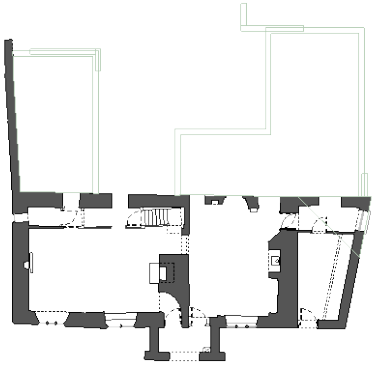

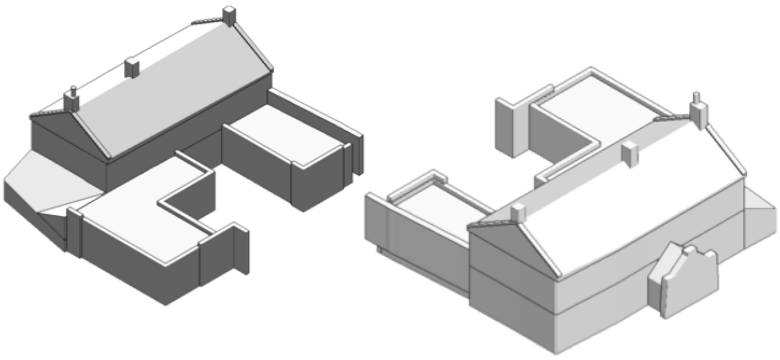

Note rear extension includes 58 m^3 reduced dig within the extension footprint. Perceived volume increase above existing ground level is 7%.

The NPPF does not quantify what amounts to a disproportionate extension and we understand that each case is judged on its own individual merits. The proposed scheme involves the construction of single storey rear extensions, balanced by the removal of the existing elements including a block built shed. This will result in a cumulative increase of 11.8%. Taking into consideration the cumulative impact of the extensions as a whole and the scale of the proposed extension in relation to the size of the original property and plot, the development proposed is believed to be diminutive and a proportionate meeting the proportionality test of paragraph 89 of the NPPF.

Archaeology

Sketch proposals illustrating the redevelopment of the rear of the building which included a reduction in levels was shared with the County Archaeologist in 2022. The response was:

"Having examined our records I can confirm that there would be no archaeological issues that I would wish to raise were these proposals submitted to Wiltshire Council as a formal planning application." Neil J Adam, Assistant County Archaeologist

2.4 - WILTSHIRE CORE POLICY

Core Policy 7: Spatial Strategy – Bradford on Avon Community Area

The proposals seek to *"conserve and enhance the high quality built and natural environment in the Community Area".*

- The proposed extensions are located to the rear of the building minimising its visual presence.
- The rear extensions are proposed to be a single story with their form and materials sympathetic to the setting and that of the host building.
- The proposals minimise the loss of area of the garden by seeking to consolidate and work within the area of existing / historic buildings at the rear of the main pub building.

5.62 - *"all development will be required to maintain the integrity of the Bath and B-o-A Bats Special Area of Conservation, having particular regard to the Wiltshire Bats SAC Guidance".*

The proposed scheme is seeking to apply principles sympathetic to the integration of the extension within the garden setting. This will be achieved through the planting and maintenance of a diverse garden with high ecological value. This will be done by the community.

The proposed extension will include architectural features such as open jointed stonework to enable insects to inhabit the outer envelope of the building.

5.36 - "Development will have had due regard to the historic built and cultural environment of the town and will meet high standards of sustainable design." & "Renewable energy provision, linked with new development, will have contributed to the Community Area's aspirations to be carbon neutral."

As set out in our Objective, the scheme is seeking the complete retrofit of the building and an extension that will afford a substantial reduction in operational energy use and thereby will seek to target a carbon neutral development.

Core Policy 35: Existing Employment Land

"6.16 - It will also be important to retain existing employment uses outside the Principal Employment Areas to maintain diversity and choice of sites for employers and allow for local business expansion."

The Hop Pole Inn's failure as a business in recent years was caused by a number of factors which placed burden on the operators. The factors that impacted the viability of the business included:

- dilapidated building fabric
- low number of covers
- high rent imposed by the owners on the tenant landlord

This is a common situation and very often the basis for so many pubs to fail due in part to their low turnover (Ref: Core Policy 49, 6.70). Our business plan establishes that once repaired and extended The Hop Pole Inn has potential to achieve turnover of £450k pa with two full time and several part time staff and, to encourage an entrepreneurial tenant, we plan to charge a below-market rent. (see Business Plan)

Core Policy 39: Tourist Development

Limpley Stoke and the Limpley Stoke Village sit within at least two spheres of established tourism. Many people visiting Bath choose to stay in Limpley Stoke as a cheaper alternative to accommodation in the city. In the past tourists often visited the Hop Pole as a core part of their visitor experience. In addition, the Hop Pole is very close to the canal, local footpaths and Sustrans cycling networks. It has been a common feature on tourists' itinerary whether they have been traveling along the canal, walking or cycling.

The restoration of the Pub as a robust business that will reinstate this lost feature of the tourism landscape.

Core Policy 41: Sustainable construction and low-carbon energy

While the scheme does not intend to include a 'Sustainable Energy Strategy' but has developed to follow the PassivHaus EnerPhit principles, broadly recognised as the most successful method to achieve a low carbon, energy efficient renovation. The scheme has adopted the recommendations for Existing Buildings set out in the policy:

i) Reduce Energy Consumption & ii) use renewable low-carbon energy from local /district source

- Achieve a heritage led thermal retrofit – to mitigate energy use and demand
- Seek to move to an electric only platform for heating and hotwater – to rely on decarbonisation of the grid to mitigate carbon generation.

ii) use building-integrated renewable or low-carbon technologies

- As part of a strategy to mitigate carbon generation through energy in use - Seek on site energy capture with the use of PVs located away from the listed building
- By improving thermal performance enable the use of MVHR to further mitigate energy use
- Install secondary glazing to the south facing windows (no windows exist to the east and west).
- Develop the garden to deliver valuable ecology focused setting

Core Policy 48: Supporting Rural Life

"Community ownership
Community ownership and/or management of local shops, pubs and other services will be supported where appropriate to retain a local facility through the following measures:

vii. Appropriately scaled enabling development will be considered, where this is environmentally acceptable and justified through a supporting viability study, and where it can help maintain and enhance the community uses provided."

The proposals for the extension have been developed based on knowledge acquired through research and investigation. In simple terms the business must have a minimum of 30 covers to achieve sound economic viability.

Our research has included visits to and interviews with other pubs in the area including 'The Pack Horse' in South Stoke. The owners of this pub have a wealth of knowledge due to their experience over the past 10 years securing and operating the village pub.

In addition, Limply Stoke CBS are members of the Plunkett Foundation network. The Plunkett Foundation are a charity with a focus on supporting community owned business with a focus on pubs.

The extension is also proposed to mitigate the need for change to the form and layout of the most significant part of the GII listed building. The extension proposals have been resolved with guidance from a comprehensive design team to capture the scope of space required to ensure the future business has the best platform from which to operate thereby ensuring a sustainable outcome for both business and community and securing the long-term future of the listed building after years of harmful neglect.

Core Policy 49: Protection of rural services and community facilities

"6.71 - Rural facilities and services are those that benefit the local community such as local shops, meeting places, sports venues, cultural buildings, public houses and places of worship. There is a need to protect and encourage the development of rural services and facilities in Wiltshire to ensure that settlements, particularly those named in this Strategy, can still meet some of the day to day needs of the people who live in them. Core Policy 34 (Additional Employment Land) seeks to support the diversification of the rural economy, whilst Core Policy 48 (Supporting Rural Life) seeks to support rural life by allowing appropriate development to take place in the rural areas. Core Policy 49 is complementary to Core Policies 34 and 48, and seeks to protect existing services and community facilities in Wiltshire."

The Rose & Crown in Limpley Stoke closed in 2006 and these proposals seek to reverse the harm caused by the loss of the last pub in the village. Fundamental to achieving this is ensuring that the building can be extended to house additional covers and new facilities to support a broader range of social engagement.

The community ownership of the pub will enable lower rent to be charged to better support the successful operation of the business by reducing the burden on the operator's profits. In harmony with this arrangement is the expectation that the community will have beneficial use of a part of the pub and its garden for social activities such as a meeting place local groups, space for social activities and more. The business plan sets out how this may work.

Core Policy 51: Landscape

"6.83 - Proposals for development within or affecting the AONBs or NFNP should demonstrate that they have taken account of the objectives, policies and actions set out in those current or any other revised or replacement management plans."

"6.85 - Core Policy 51 refers to development within the setting of an AONB or national park; setting is considered to be all of the surroundings from which a designated landscape can be experienced, or which can be experienced from the designated landscape. Its extent is not fixed and may change as the landscape and its surroundings evolve. Elements of a setting may make a positive or negative contribution to the natural beauty of a landscape, and may affect the ability to appreciate it."

The proposed reinstatement of the Hop Pole Inn satisfies Core Policy 51 as it seeks to 'protect, conserve and – enhance landscape character' though the reinstatement of the historic pub and its garden. Potential impact is mitigated through the design of a new extension that will respond sensitively to its setting. The proposals satisfied Core Policy 51:

ii). The locally distinctive character of settlements and their landscape settings.

v). Landscape features of cultural, historic and heritage value.

How - ii) & v) by preserving the building fabric, restoring and reinstating the pub and its garden.

vii). Tranquillity and the need to protect against intrusion from light pollution, noise, and motion.

How - The scheme will be developed with support and guidance from 'Dark Sky Lighting' so that the light from the pub will be designed to suit its setting within the AoNB.

viii). Landscape functions including places to live, work, relax and recreate.

The pub garden is recognised as one of the very few shared spaces for social interaction that the village has. Its reinstatement is at the heart of the community's ambition of the Hop Pole Inn.

Core Policy 52: Green Infrastructure

Although the pub garden will remain a privately owned space as part of the Hop Pole Inn, it will be owned by the Community and as such is being considered a shared space. As such Core Policy 52 is satisfied as the garden is to be retained and brought back to the Community as a critical part of improving social cohesion and wellbeing.

Core Policy 57: Ensuring high quality design and place shaping

Ensuring high quality design and place shaping
A high standard of design is required in all new developments, including extensions, alterations, and changes of use of existing buildings. Development is expected to create a strong sense of place through drawing on the local context and being complementary to the locality. Applications for new development must be accompanied by appropriate information to demonstrate how the proposal will make a positive contribution to the character of Wiltshire through:

i). enhancing local distinctiveness by responding to the value of the natural and historic environment, relating positively to its landscape setting and the existing pattern of development and responding to local topography by ensuring that important views into, within and out of the site are to be retained and enhanced

iv). being sympathetic to and conserving historic buildings and historic landscapes

How – Although minor in development terms the works to the Hop Pole Inn are intended to achieve a sustainable outcome though minimal impact on the historic fabric and openness of the existing garden. This is to be achieved though ensuring the extensions are no larger than is necessary to support a sound business.

v) the maximisation of opportunities for sustainable construction techniques, use of renewable energy sources and ensuring buildings and spaces are orientated to gain maximum benefit from sunlight and passive solar energy, in accordance with Core Policy 41 (Sustainable Construction and Low Carbon Energy)

How – The scheme is seeking to minimise the energy use in operation and to mitigate carbon generation through an electrically focused heating system. To aid this move to electricity as the primary energy source the scheme will include a series of photovoltaics at the end of the garden. These will be south facing and on the area of the site known to have the greatest solar exposure.

vii). having regard to the compatibility of adjoining buildings and uses, the impact on the amenities of existing occupants, and ensuring that appropriate levels of amenity are achievable within the development itself, including the consideration of privacy, overshadowing, vibration, and pollution (e.g. light intrusion, noise, smoke, fumes, effluent, waste or litter)

How – The scheme is for measured and small scale development all of a single storey. The intention is for the day-to-day operations to occur at the east side of the building where the cellar and kitchen will be located. In this way the pub will minimise its impact of its adjoining neighbours

END