8 MINUTE ENERGY LTD
5 Dane Close,
Bradford on Avon,
BA15 2NA
+44 (0)7922 587 944
jmbensted@gmail.com

Information to be confirmed on site. Make sure this drawing is the latest version available. E-Mail versions of this drawing shall not be used as a contract document unless retrospectively validated by a hardcopy and issue sheet. All elements of the works shall be designed and constructed in accordance with and within the contraints of British Standards, Codes of Practice, all current Building Regulations and other Statutory Regulations and Acts unless otherwise stated.

PROJECT INFO

CLIENT:	Jonelle Daniels & David Lindop		
ADDRESS:	1 Staples Hill, Freshford, BA2 7WL		
PROJECT:	028-STAPLES-BA2		
TITLE:	Array Details		
SCALE:	1:50@A3	Drawing No.:	103.01

TECHNICAL INFO

Panel manufacture:	TRINA		
Model:	VERTEX 505		
Panel dimensions:	2187x1102x35mm		
No. Panels: 51	Tilt: 15°	Azimuth:	SW/S
Total Power (kWp):	25.755		

Notes:

1. Dimensions are in mm and are indicative only.

REVISIONS

REV.	REV. INFO	DATE	DRAWER	CHECKER
A	Preliminary Design		JMB	JMB

INDICATIVE FRONT VIEW - ARRAY (ACTUAL ARRANGEMENT TO BE 3 IN LANDSCAPE)

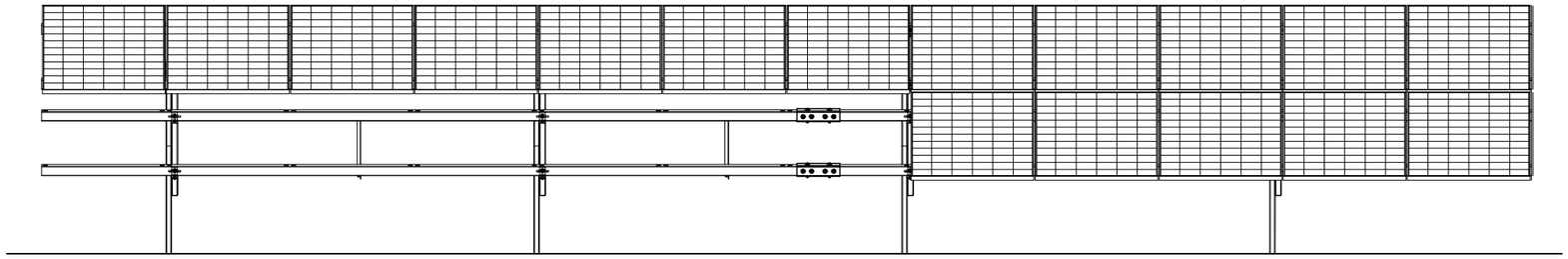

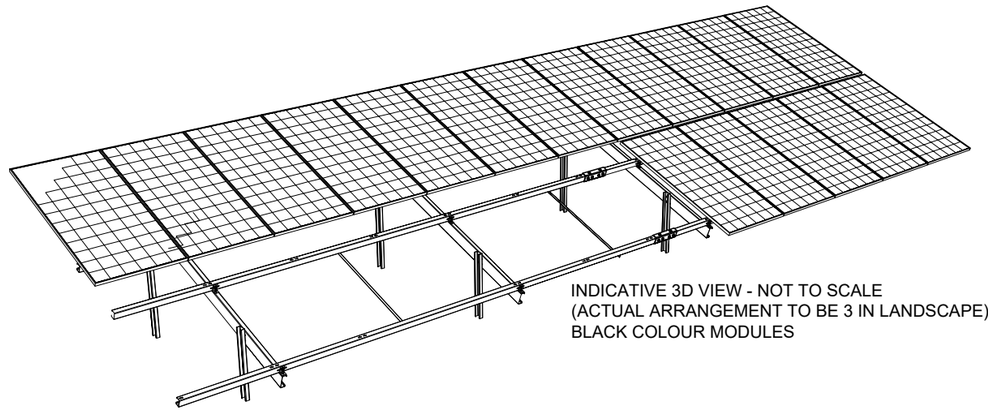

INDICATIVE 3D VIEW - NOT TO SCALE
(ACTUAL ARRANGEMENT TO BE 3 IN LANDSCAPE)
BLACK COLOUR MODULES

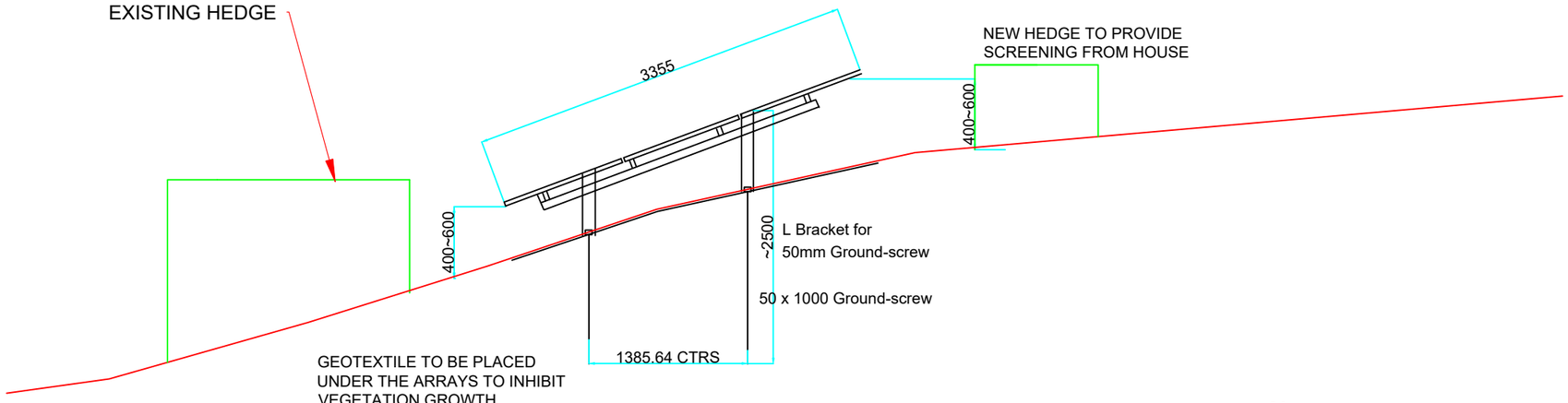

SECTIONAL VIEW

