© COPYRIGHT

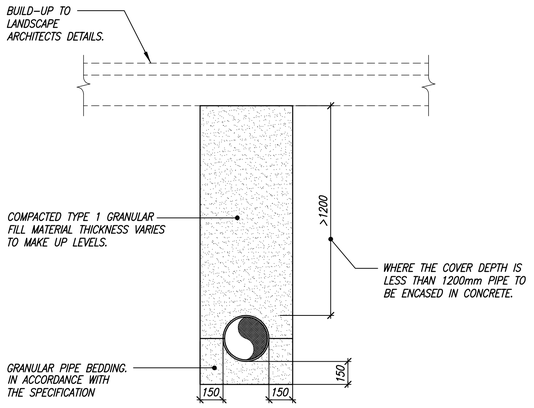

COVER DEPTH > 1.2m

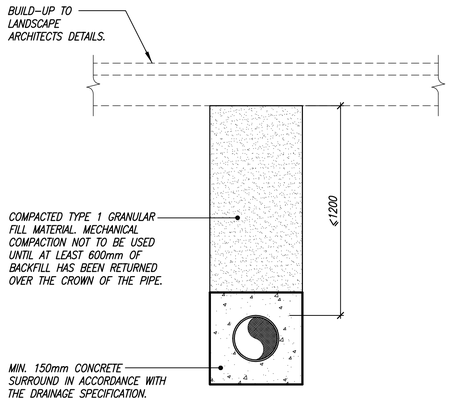

COVER DEPTH ≤ 1.2m

DETAIL 1
TYPICAL PIPE BEDDING DETAIL FOR EXTERNAL PIPEWORK

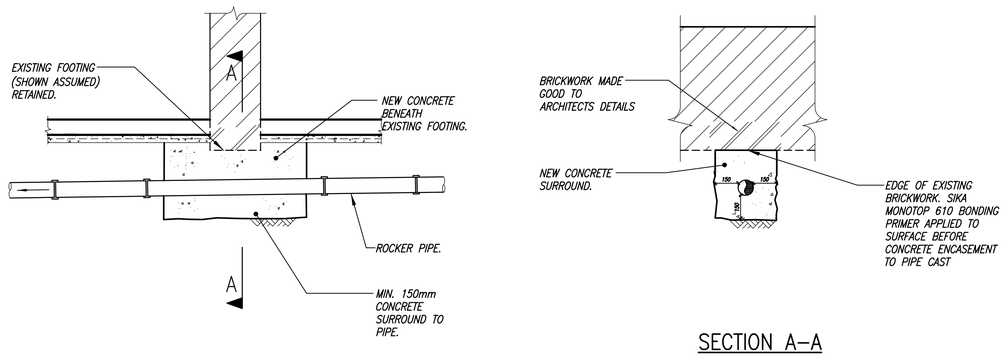

SECTION A–A

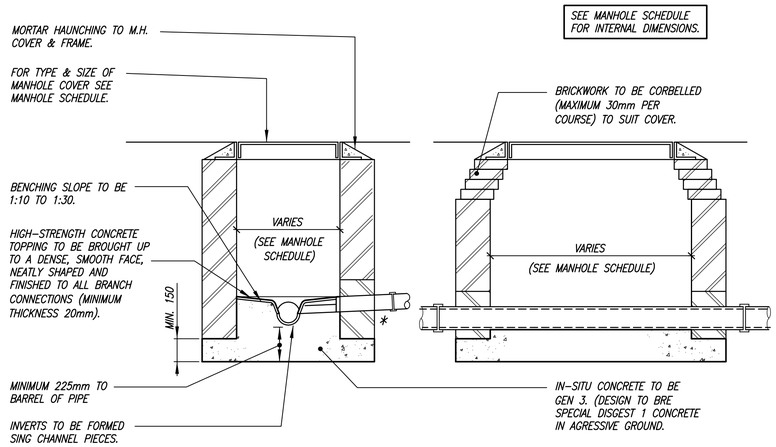

SECTION A–A SECTION B–B

DETAIL 3
NEW DRAINAGE BELOW EXISTING FOOTINGS

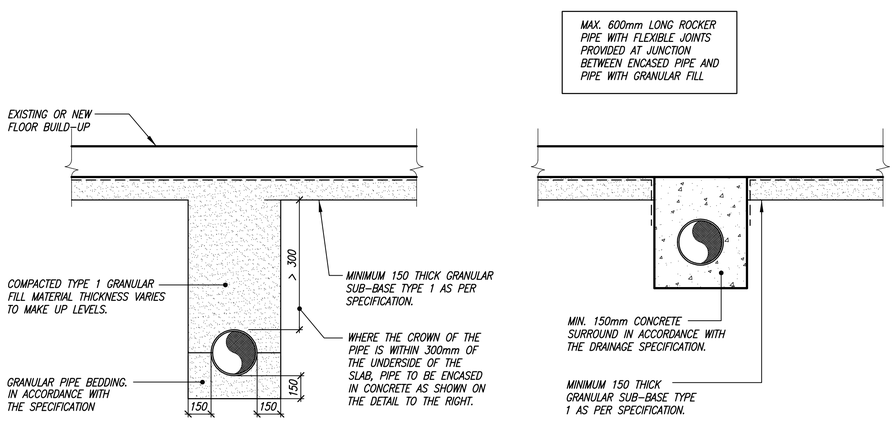

DETAIL 4
TYPICAL PIPE BEDDING DETAIL FOR INTERNAL PIPEWORK
(1:20)

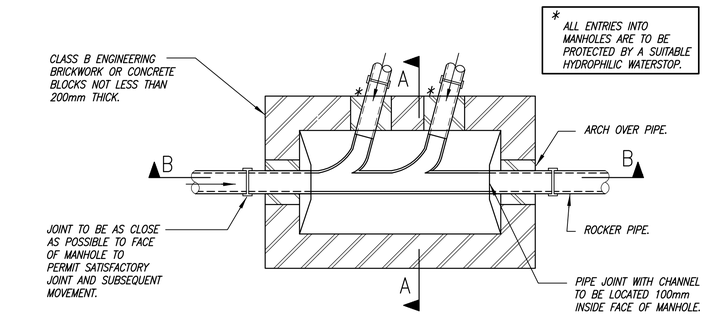

PLAN

DETAIL 2
BRICK MANHOLE DETAIL
DEPTH FROM COVER LEVEL TO SOFFIT OF PIPE LESS THAN 1.0m

NOTE:–
THE USE OF PRECAST RECTANGULAR CONCRETE MANHOLE UNITS WITH 150mm GRADE GEN 3 CONCRETE SURROUND (DESIGNED TO BRE SPECIAL DIGEST 1 CONCRETE IN AGGRESSIVE GROUND) IS PERMITTED.

DETAIL 5
INTERNAL STUB STACK

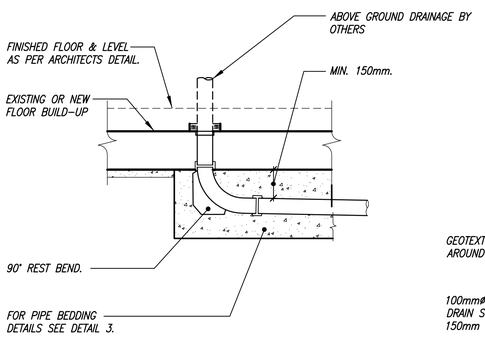

DETAIL 6
TYPICAL PERFORATED LAND DRAIN DETAIL
(1:20)

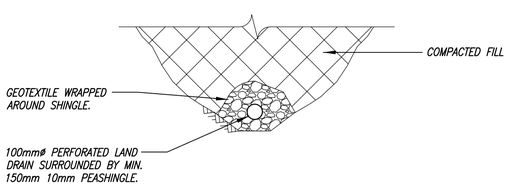

0m 0.5m 1m 1.5m 2m
SCALE BAR
(1:20)

notes

1. THIS DRAWING IS TO BE READ IN CONJUNCTION WITH ALL RELEVANT ARCHITECT'S AND ENGINEER'S DRAWINGS AND THE SPECIFICATION.

A	24.09.20	ISSUED FOR CONSTRUCTION DETAIL 3 AND DETAIL 6 AMENDED	TJ
–	29.05.20	ISSUED FOR TENDER	TJ

job
TOTTENHAM HOUSE
POND COTTAGE

title
TYPICAL DRAINAGE DETAILS
SHEET 1

drawn RG | checked TJ
date DEC '19 | scale (original - A1) 1:20

Alan Baxter
75 Cowcross Street London EC1M 6EL
tel 020 7250 1555
email aba@alanbaxter.co.uk
www.alanbaxter.co.uk

drg. no. **1896/10/PC251** | rev. **A**

Alan Baxter Limited is a limited company registered in England and Wales, number 06600598. Registered office as above.