One Step Joinery
for purpose-made staircases and general woodwork

Unit 15, Techno Trading Estate
Bramble Road, Swindon
Wiltshire SN2 8HB
Tel: 01793 524458
Fax: 01793 574806
Email: info@onestepjoinery.co.uk
Website: www.onestepjoinery.co.uk

Suzanne Black
19 London Road
Marlborough
Wiltshire
SN8 1BA

9th November 2023

Dear Suzanne

Please find below the specification details for the proposed new windows for the address above.
To be read in conjunction with the set of 7 pages of drawings.

1 No. Rear Elevation Casement Window – First Floor

Drawing No. 01-02

New Hardwood Window
In Sapele (hardwood)
Painted finish
Draught sealed frame using traditional bead moulding to head & jambs
Square cill
Casement to have traditional ovolo moulding
Glazed with 12mm slimlite Clear DG Unit fitted into single glazed rebate
Frame & casement to be constructed using traditional mortice & tenon joints
Opening casement, side hung
Fitted with black hinges, black curly tail window stay & fastener

The existing window is rotten beyond repair.
The proposed replacement is to keep the window in the style of the existing window.

One Step Joinery
for purpose-made staircases and general woodwork

Unit 15, Techno Trading Estate
Bramble Road, Swindon
Wiltshire SN2 8HB
Tel: 01793 524458
Fax: 01793 574806
Email: info@onestepjoinery.co.uk
Website: www.onestepjoinery.co.uk

2 No. Front Elevation Sliding Sash Windows – Ground Floor & First Floor

Drawing No. 03-07

New Hardwood Windows
In Sapele (hardwood)
Painted finish
Traditional box sash windows
Projection cill
Casement to have traditional ovolo moulding
Solid glazing bars
Glazed with 12mm slimlite Clear DG Units fitted into single glazed rebates
Traditional staff beads & parting beads
Brush seals fitted
Brass pulley wheels
Brass Brighton fasteners
Ropes & Steel weights

The existing windows are rotten beyond repair. They have also been repaired, quite badly, in the past leaving them more exposed to decay.

The proposed replacement is to keep the window in the style of the existing first floor window and matching the original windows on other neighbouring properties.
The existing ground floor window is not the original window, it has been replaced with a sliding sash window using modern spiral balance springs. Therefore, we propose to replace this with the same style as the first floor window, putting them back to the original details.

Yours sincerely

Mark Foster
Director
For and on behalf of One Step Joinery Limited

One Step Joinery
Unit 15, Techno Trading Estate
Bramble Road, Swindon, SN2 8HB
Tel: 01793 524458
Fax: 01793 574806
e-mail: info@onestepjoinery.co.uk

1:10 @ A4

mm
0 100 200 300 400 500

REF: 19 LONDON ROAD
SN8 1BA

DRG N° 01

REAR ELEVATION

FIRST FLOOR

CASEMENT WINDOW

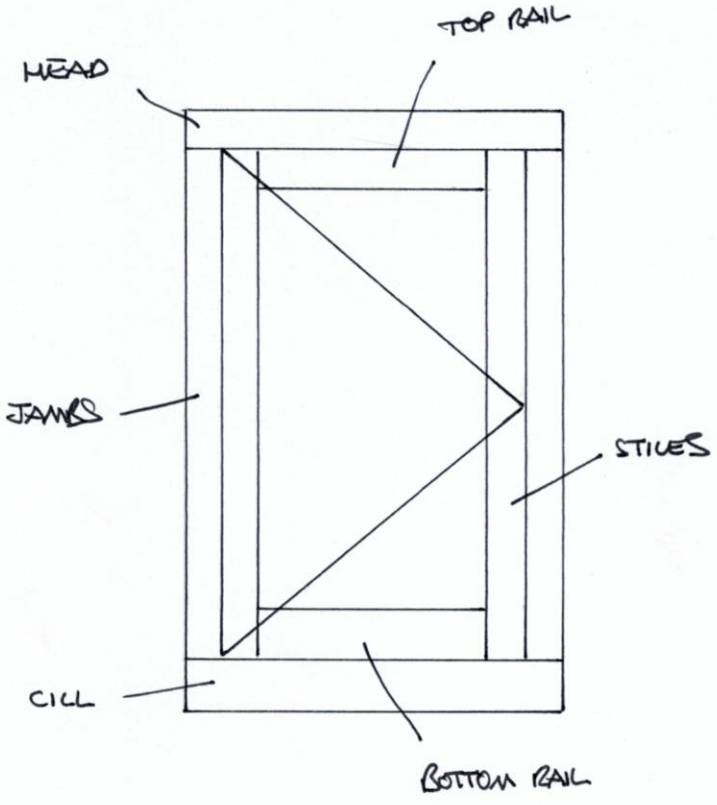

One Step Joinery
Unit 15, Techno Trading Estate
Bramble Road, Swindon, SN2 8HB
Tel: 01793 524458
Fax: 01793 574806
e-mail: info@onestepjoinery.co.uk

1 : 1 @ A4

mm
0 10 20 30 40 50

REF: 19 LONDON ROAD
SN8 1BA

DRG Nº 02

CASEMENT WINDOW
DETAILS

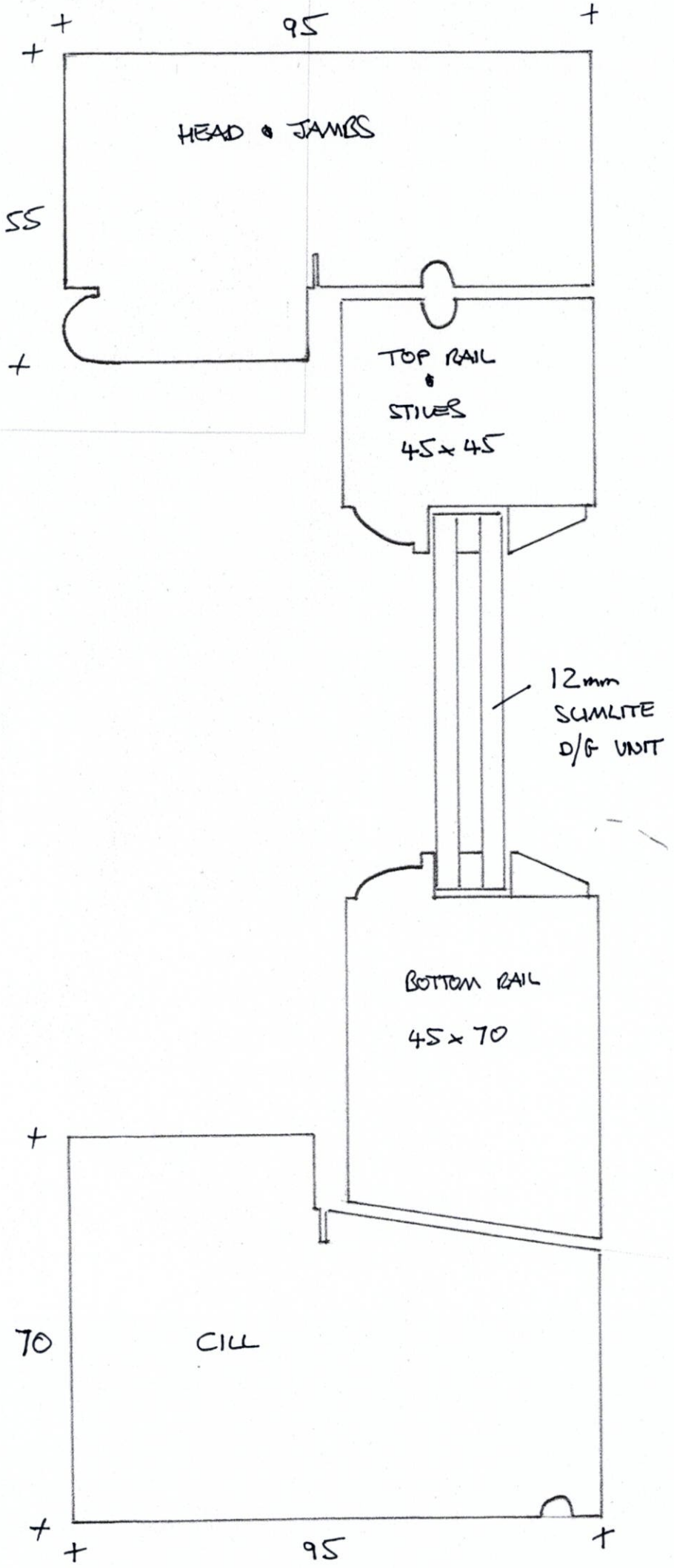

One Step Joinery
Unit 15, Techno Trading Estate
Bramble Road, Swindon, SN2 8HB
Tel: 01793 524458
Fax: 01793 574806
e-mail: info@onestepjoinery.co.uk

1 : 10 @ A4

mm
0 100 200 300 400 500

REF: 19 LONDON ROAD
SN8 1BA

DRG Nº 03

FRONT ELEVATION

SLIDING SASH WINDOWS

FIRST FLOOR WINDOW

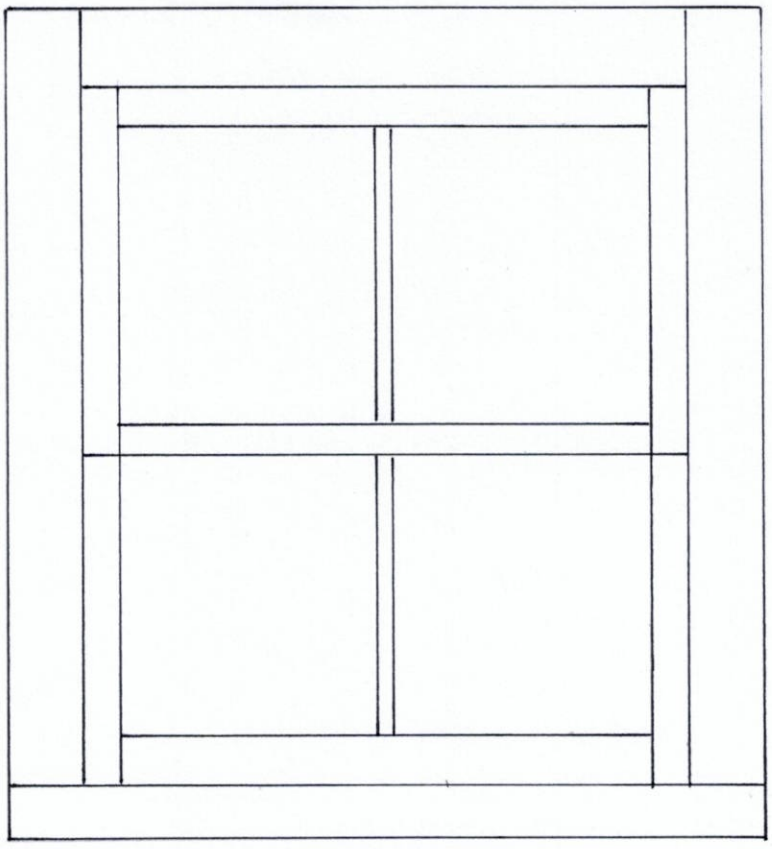

GROUND FLOOR WINDOW

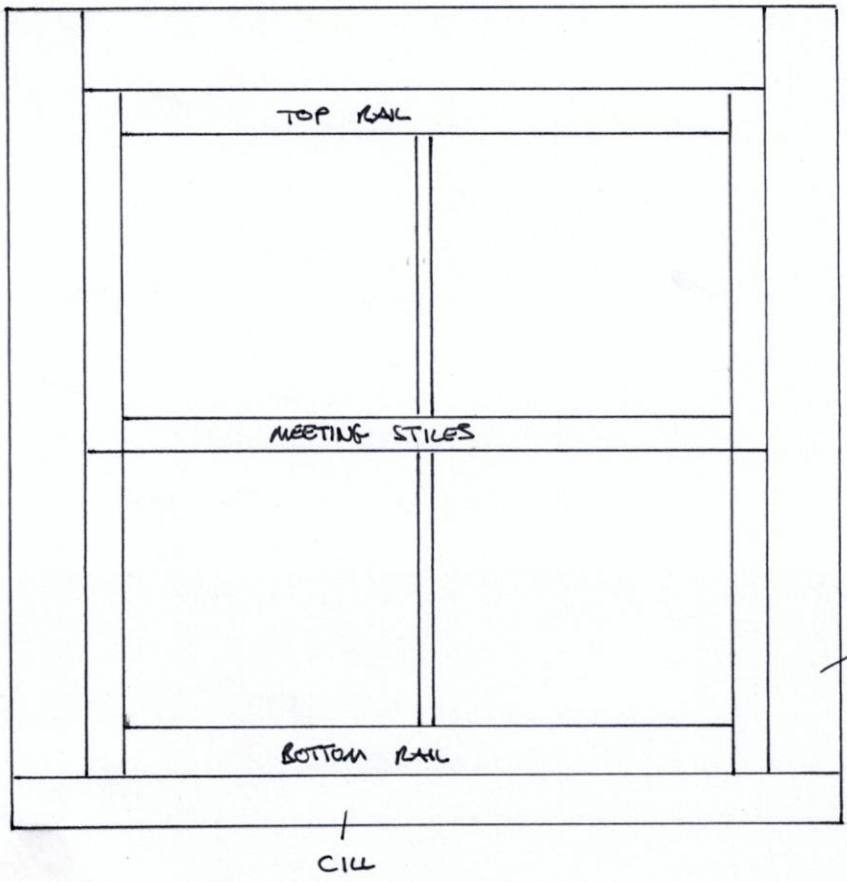

One Step Joinery
Unit 15, Techno Trading Estate
Bramble Road, Swindon, SN2 8HB
Tel: 01793 524458
Fax: 01793 574806
e-mail: info@onestepjoinery.co.uk

1:1 @ A4

mm
0 10 20 30 40 50

REF : 19 LONDON STREET
SN8 1BA

DRG N° 04

CILL DETAILS

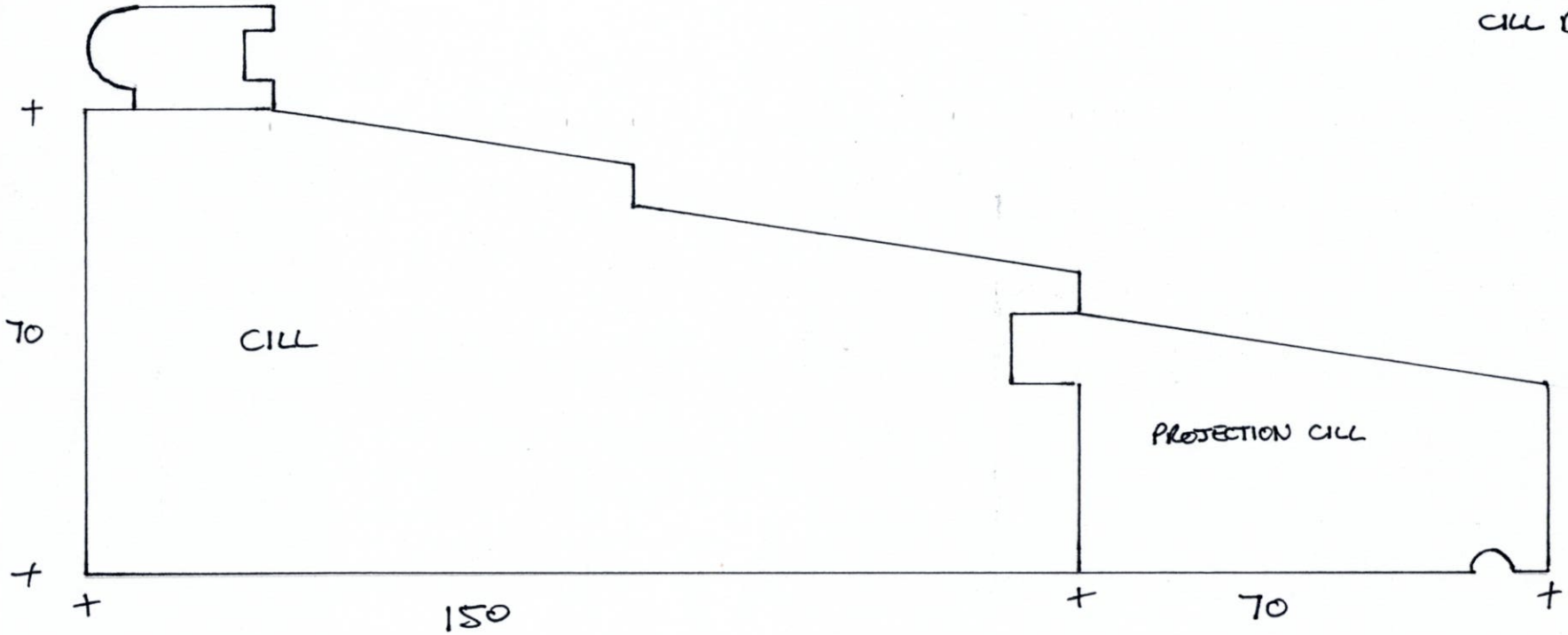

One Step Joinery
Unit 15, Techno Trading Estate
Bramble Road, Swindon, SN2 8HB
Tel: 01793 524458
Fax: 01793 574806
e-mail: info@onestepjoinery.co.uk

1:1 @ A4

mm
0 10 20 30 40 50

REF: 19 LONDON ROAD
SN8 1BA
DRG Nº 05

WINDOW DETAILS

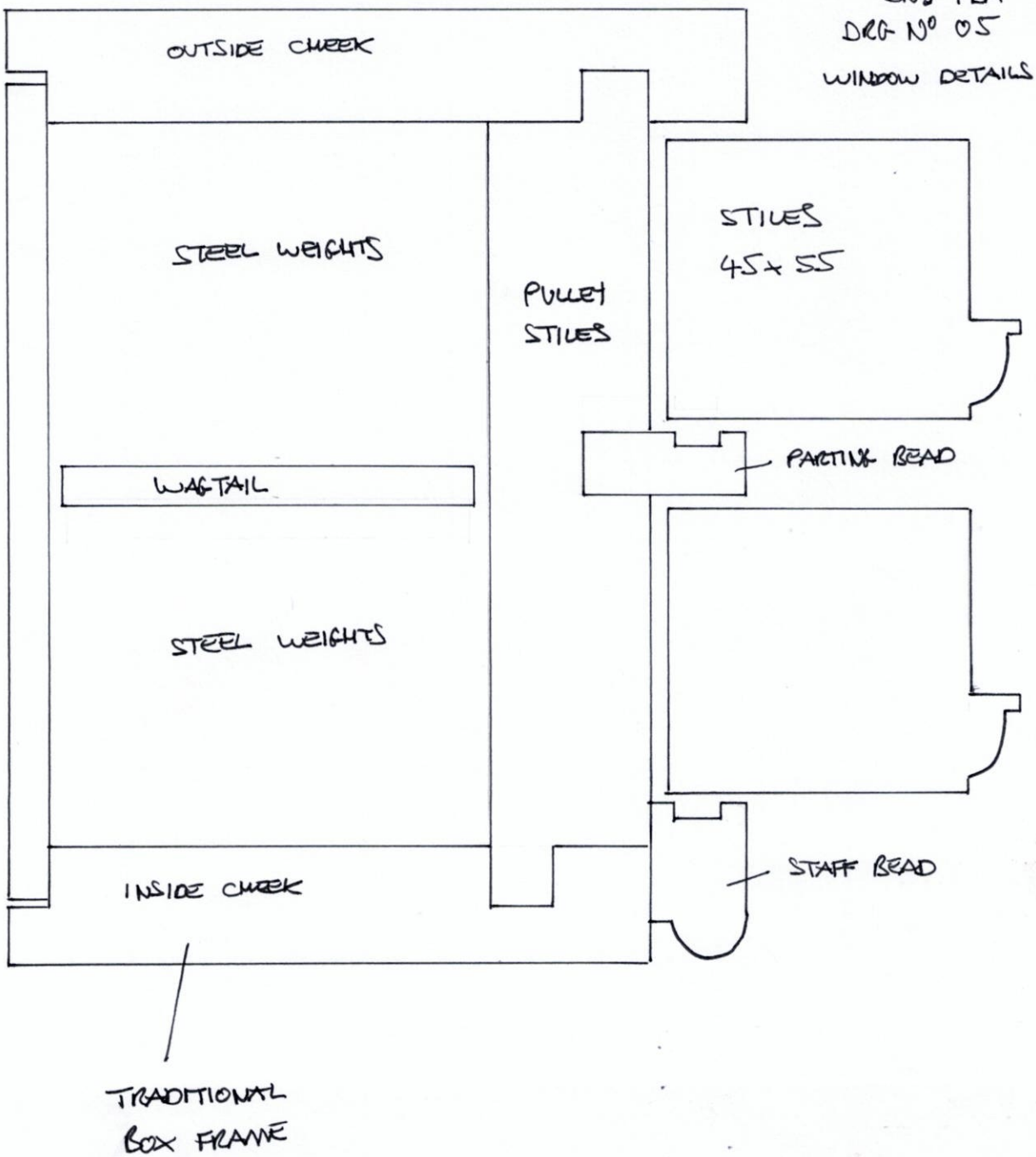

One Step Joinery
Unit 15, Techno Trading Estate
Bramble Road, Swindon, SN2 8HB
Tel: 01793 524458
Fax: 01793 574806
e-mail: info@onestepjoinery.co.uk

1:1 @ A4

mm
0 10 20 30 40 50

REF: 19 LONDON ROAD
SN8 1BA
DRG N° 06

SASH DETAILS

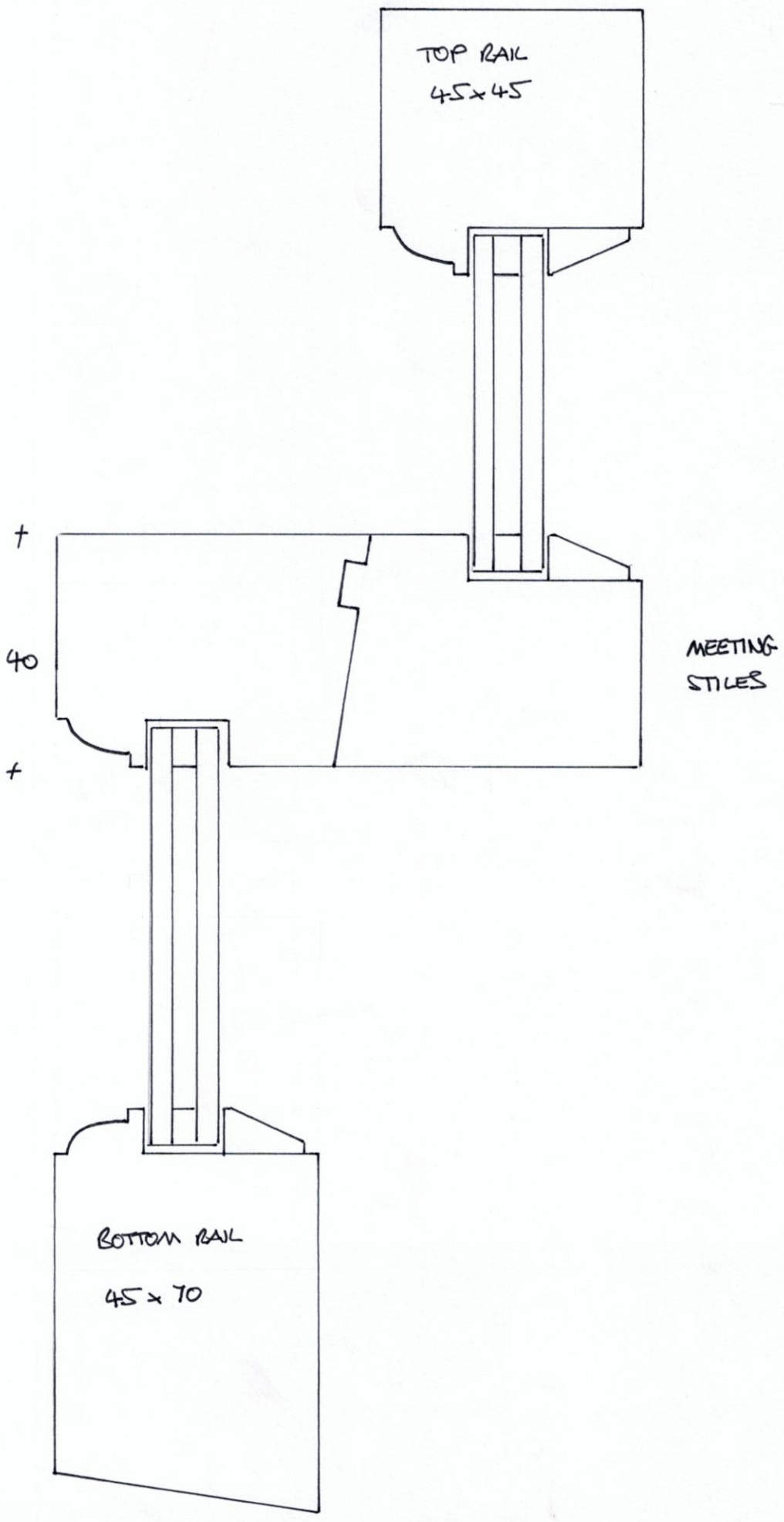

One Step Joinery
Unit 15, Techno Trading Estate
Bramble Road, Swindon, SN2 8HB
Tel: 01793 524458
Fax: 01793 574806
e-mail: info@onestepjoinery.co.uk

1:1 @ A4

0 10 20 30 40 50 mm

REF: 19 LONDON ROAD
SN8 1BA

DRG Nº 07

GLAZING BAR DETAILS

