Archaeological Mitigation and Management Plan – Updated

Wick Solar Farm, Lacock, Wiltshire

On behalf of JBM Solar Projects 13 Ltd

Date: 10/11/2023 | Pegasus Ref: P20-0137

Author: Dr Elizabeth Pratt



Document Management				
Version	**Date**	**Author**	**Checked/approved by:**	**Reason for revision**
1	September 2021	Dr Elizabeth Pratt (Senior Heritage Consultant)	Gail Stoten (Executive Director – Heritage)	-
2	October 2021	Dr Elizabeth Pratt (Senior Heritage Consultant)	Gail Stoten (Executive Director – Heritage)	Addressing comments from Melanie Pomeroy-Kellinger
3	November 2021	Dr Elizabeth Pratt (Senior Heritage Consultant)	Gail Stoten (Executive Director – Heritage)	Addressing comments from Melanie Pomeroy-Kellinger
4	November 2023	Dr Elizabeth Pratt (Associate Heritage Consultant)	Gail Stoten (Executive Director – Heritage)	Updates to reference a reduction to the previously-agreed above-ground foundation zone in Field 9: • Paragraph 1.2 • Paragraph 2.3 • Paragraph 2.9 • Paragraph 2.11 • Paragraph 3.17 • Plate 4 • Appendix 1 • Appendix 6 (formerly Appendix 7) Update to reference a change to the number of swales coinciding with a 10m radius of the exclusion and above-ground foundation zones.

CONTENTS:

1.	INTRODUCTION	1
2.	MITIGATION PRE-COMMENCEMENT	4
3.	MANAGEMENT DURING CONSTRUCTION	6
4.	MANAGEMENT DURING OPERATION	12
5.	MANAGEMENT DURING DECOMMISSIONING	14

APPENDIX 1: DEVELOPMENT LAYOUT & PLANTING PLAN (2023)

APPENDIX 2: PERIMETER FENCING & ACCESS TRACKS

APPENDIX 3: MONOBLOC & CABLE SUSPENSION SYSTEM

APPENDIX 4: BURIED CABLE TRENCHES

APPENDIX 5: BATTERY STATIONS

APPENDIX 6: STRIP MAP & SAMPLE EXCAVATION AREAS (2023)

1. Introduction

1.1 This Archaeological Mitigation and Management Plan has been prepared in relation to the proposed development of a solar farm outlying Wick Farm near Beanacre in Wiltshire (Wiltshire Council Planning Application 20/06840/FUL).

1.2 The original (2021) edition of this AMMP was approved as part of the planning permission granted in 2021. This current version references a proposed reduction to one of the archaeological mitigation zones, which is to be the subject of a Non Material Amendment planning application.

Previous assessment work

1.3 A heritage statement (Pegasus Group 2020), a geophysical survey (Archaeological Surveys 2020), and an archaeological trial trench evaluation (Cotswold Archaeology 2020) have been undertaken to inform and support the planning application. Two heritage addendums have also been prepared to clarify impacts on selected designated heritage assets in the wider area and to assess the significance of the buried archaeological resource of the site (Pegasus Group 2021a, Pegasus Group 2021b).

1.4 The geophysical survey re-captured data for areas of the site previously subject to archaeological investigation in 2015 for the Melksham to Thingley cable route, and collected new data from the rest of the site. The results indicated the continuation of a previously-known Roman roadside settlement through most of Fields 5 and the north-eastern corner of Field 4 on the west side of the railway line and through the southernmost part of Field 6 on the east side of the railway line (Plate 1). The geophysical survey also identified two previously-unknown zones of probable Iron Age to Romano-British enclosed settlement in Fields 9, 10 and 12 in the central and northern parts of the eastern half of the site (Plate 2, Plate 3; see below).

1.5 The trial trench evaluation confirmed the Roman road and settlement (stone surfaces, walls, occupation deposits, beam slots, postholes, pits, ditches) in Fields 4, 5 and 6. Within the settlement, the road was surfaced with substantial metalling; outside the settlement, it comprised a thin layer of gravel. The enclosures in the north-eastern corner of Field 4 resemble domestic garden plots. The enclosures in the north-western corner of Field 5 are also peripheral to the settlement core along the road. In Fields 9, 10 and 12, trenches recorded rectilinear enclosures containing post-holes, pits and ditches seemingly of transitional Iron Age to Roman settlement activity.

Archaeological sensitivities

1.6 Following discussions with Melanie Pomeroy-Kellinger, Archaeological Advisor to Wiltshire Council, it has been agreed that the Roman road and settlement in Fields 4, 5 and 6 will be excluded from development while the transitional Iron Age to

Roman settlement in Fields 9, 10 and 12 will be subject to development, but using above-ground foundations and cable suspension systems and following the execution of a targeted programme of strip map and sample excavation.

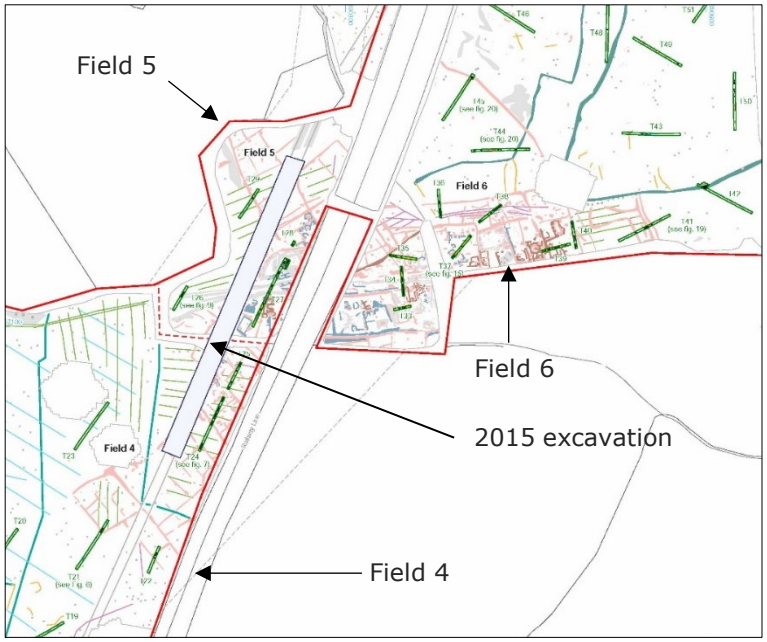

Plate 1: Area of Roman roadside settlement and associated peripheral enclosures within Fields 4, 5 and 6 (from Cotswold Archaeology 2020)

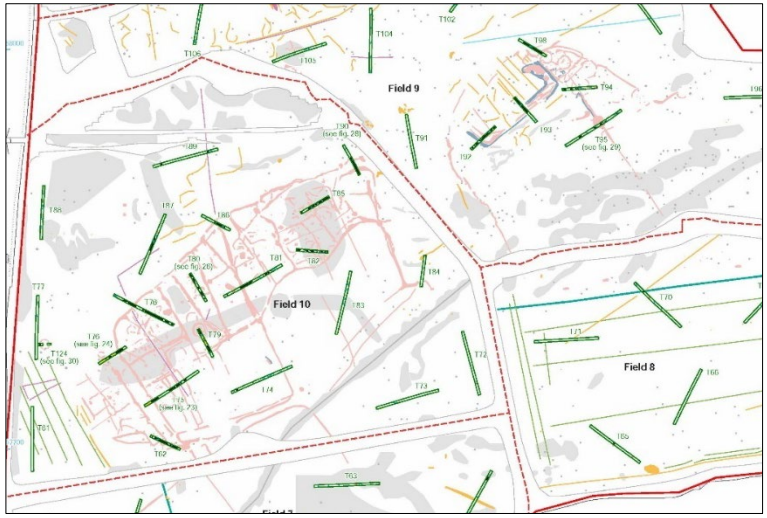

Plate 2: Area of transitional Iron Age to Roman settlement within Fields 9 and 10 (from Cotswold Archaeology 2020)

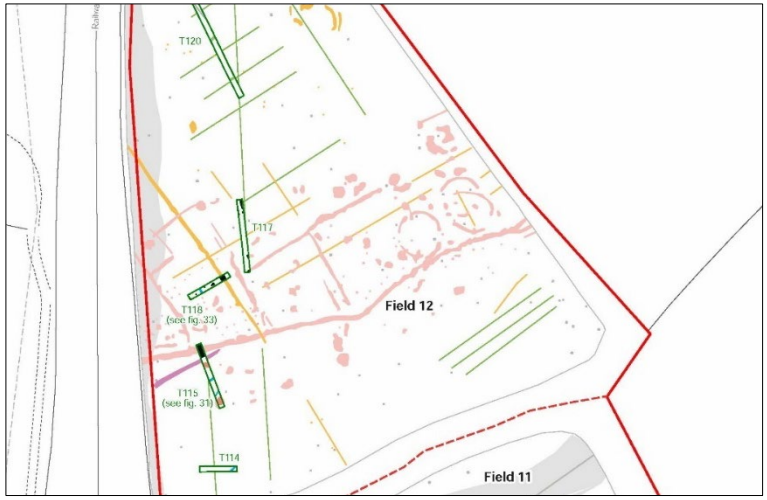

Plate 3: Area of transitional Iron Age to Roman settlement within Field 12 (from Cotswold Archaeology 2020)

Objectives

1.7 This Archaeological Mitigation and Management Plan details the strategy for the mitigation and management of the Iron Age and Roman buried archaeological resource of the site during the construction, operation and decommissioning of the proposed Wick Solar Farm.

2. Mitigation Pre-Commencement

Preservation *in situ*

2.1 Development is excluded from the Roman roadside settlement recorded in Fields 4, 5 and 6; in fact, the entirety of Field 5 will be left undeveloped with the exception of cabling around the northern and western field margins (Appendix 1). This strategy was endorsed by Melanie Pomeroy-Kellinger, Archaeological Advisor to Wiltshire Council, in email correspondence dated 3rd September 2021.

Above-ground foundations

2.2 Development is proposed across the area of transitional Iron Age to Roman settlement in Fields 9, 10 and 12, but above-ground foundations and cable suspension will be deployed to avoid truncation of buried archaeological deposits. This strategy was endorsed by Melanie Pomeroy-Kellinger in email correspondence dated 3rd September 2021.

2.3 Further archaeological investigations in 2023 (see 2.9) provided further information regarding the extent, character, depth and significance of the archaeology in the three fields. Based on the results, a reduction to the above-ground foundation zone in Field 9 was proposed to Neil Adam, Assistant County Archaeologist at Wiltshire Council, and approved by him in email correspondence dated 29th September and 2nd October 2023.

2.4 The final extents of the above-ground foundation zones in all three fields are illustrated in Appendix 1.

2.5 The chosen above-ground foundation system is 'Monobloc'. This comprises ballast slabs measuring 1m in width x 2.4m in length x 0.18m in depth, which sit on a 100mm thick, porous gravel sub-base overlying a geotextile membrane laid directly onto the current ground surface. Piles supporting the PV panels will be mounted to the ballast slabs. Each slab will carry 15 panels, and a single inverter/combiner box will be mounted to one of the piles. The system is illustrated in Appendix 3.

2.6 Low voltage cables will be suspended on the underside of each row of ballasted panels in Fields 9, 10 and 12. The cables will sit in a steel cable hanger with a rubber coating, which will be hooked onto the back of the array (Appendix 3).

2.7 At the west end of each row there will be a need for suspended cables to be collected and buried in one single trench, to deliver the electricity from the field of panels to the closest inverter station (Appendices 1 and 4).

2.8 Retaining these cables above-ground, whether suspended or in trays, would present a health and safety issue for the movement of maintenance traffic. Further details of these cable trenches are presented in 3.14, below.

Further archaeological investigation

2.9 The 2021 edition of this AMMP noted that selected areas within Fields 9, 10 and 12 would be subject to strip map and sample excavation prior to the construction phase:

- **0.21ha within Field 9;**
- **0.68ha within Field 10;**
- **0.18ha within Field 12.**

2.10 A plan showing these areas is included as Appendix 6 and was accepted by Melanie Pomeroy-Kellinger in email correspondence dated 3rd September 2021.

2.11 A Written Scheme of Investigation (WSI) for the execution of this plan (comprising fieldwork, post-excavation analysis, reporting) was prepared by Cotswold Archaeology, a Chartered Institute for Archaeologists (CIfA) Registered Organisation, and approved by Neil Adam, Assistant County Archaeologist, on 19th May 2023. The fieldwork was subsequently carried out between May and September 2023, and a summary report was provided in October 2023.

2.12 Archaeological evaluation, and mitigation as appropriate, will be required for the cable route connecting the solar farm to the Melksham Substation. The exact route through the National Grid land to the south of Westlands Lane has not yet been established as access will only be permitted if/when planning permission is granted.

2.13 It is proposed that archaeological evaluation of the cable route will comprise geophysical survey in the first instance. A 30m-wide corridor centred on the cable route will be surveyed, as recommended by *EAC Guidelines for the Use of Geophysics in Archaeology*. The survey results will determine the requirement for and scope of any further evaluation (such as targeted trial trenching) or mitigation (such as archaeological monitoring of the excavation of the cable run).

2.14 A WSI for the geophysical survey will be prepared by the appointed contractor, and submitted to and approved by Melanie Pomeroy-Kellinger prior to commencement. Once available, the survey report will be issued to Melanie Pomeroy-Kellinger and will inform discussions on further evaluation and mitigation.

3. Management During Construction

Pre-Commencement

Preparatory groundworks

3.1 For the majority of the site there will be no topsoil stripping or levelling; the intention is to work with the natural topography. There will be no topsoil stripping in the development exclusion zones. There will be no topsoil stripping in the above-ground foundation zones except for the localised areas to be subject to strip map and sample excavation (see Section 2).

Fencing

3.2 Prior to commencement of groundworks for the installation of the solar arrays and associated infrastructure, the development exclusion zones for the Roman roadside settlement in Fields 4, 5 and 6 will be enclosed with Heras fencing to prohibit access during the construction phase.

3.3 Typical Heras panel dimensions are 3.5m wide x 2.0m tall; they are inserted into bases placed directly onto the ground surface. This is the industry-standard temporary fencing solution for large construction sites – providing an effective, robust, highly visible barrier. Once installed, Melanie Pomeroy-Kellinger (or her representative or successor) will be invited to view the fencing to approve its suitability.

3.4 Industry-standard signage prohibiting unauthorised access will be attached at eye-level to the fence panels at suitable intervals. During construction activities in close proximity to the Roman roadside settlement fencing, hi-visibility tape can be temporarily applied to relevant fence panels to assist with plant operations.

3.5 The nature, location, and sensitivity of the Roman roadside settlement, and the work protocols to be adopted during all proximate construction works, will:

- **Form part of the relevant construction method statement(s);**
- **Be brought to the attention of all construction personnel engaged on any aspect of the project prior to their admittance onto the construction site, e.g., via a site induction / toolbox talk.**

3.6 Once construction works have commenced, the integrity and effectiveness of the Roman roadside settlement fencing will be subject to routine checks every month to ensure that the panel fastenings and bases are secure and all signage is prominent and visible. One-off checks will also be undertaken as follows:

- **Prior to commencement of, and subsequent to, any discrete new phase of construction works;**
- **Prior to commencement of, and subsequent to, construction works within especial proximity to the fencing – namely, installation of arrays and cabling outside the fencing;**

- **Subsequent to any instances of authorised (or unauthorised) access to the Roman roadside settlement areas – including landscaping (see below); and**
- **Subsequent to any instances of damage, either accidental or criminal, to the fencing and any associated repairs.**

3.7 Removal of the fencing at any time prior to completion of the construction of the development would only be undertaken after providing reasonable justification to Melanie Pomeroy-Kellinger (or her representative or successor) and receiving her/their written approval.

Installation

Access tracks

3.8 Access tracks are required within the site for construction and operation. Existing farm tracks will be used wherever possible. These are illustrated in Appendix 2 and described below:

- **Through the northern parts of Fields 9 and 10 (outside the above-ground foundation zone);**
- **Along the western margins of Fields 11, 10, 7 and 6 (outside the development exclusion zone);**
- **Along the northern margin of, and on a south-westerly alignment through, Field 4;**
- **Along the eastern margin of Field 1;**
- **Along the northern and eastern margins of Field 3;**
- **Along the southern margins of Fields 3 and 2.**

3.9 None of these routes cross the archaeologically-sensitive areas.

3.10 Existing tracks will be reinforced where necessary by excavation up to 400mm below present ground level to lay GeoGrid Ground Stabilisation Mesh, followed by up to 150mm of compacted soil, another GeoGrid Ground Stabilisation Mesh, and up to 250mm thick of crushed concrete (Appendix 2).

Vehicle movements within above-ground foundation zones

3.11 Only lightweight plant will be deployed to transport and install the solar arrays and cabling within the above-ground foundation zones in Fields 9, 10 and 12. The plant will only use pre-defined routes that have been laid with Terrafirma matting. No vehicle movements will take place during or immediately after heavy rainfall. These measures will avoid truncation and minimise compression of the buried archaeological deposits here.

Construction groundworks

3.12 Construction groundworks across the site will include:

- **Piling of the solar arrays;**
- **Excavation of cable trenches;**
- **Excavation of bases for the battery stations;**
- **Excavation of drainage swales;**
- **Installation of perimeter fencing.**

3.13 All solar arrays aside from those in the above-ground foundation

zones in Fields 9, 10 and 12 (see Section 2) will be piled.

3.14 As discussed in Section 2, buried cabling is needed to deliver the electricity from each field of panels to the closest battery station. The cable routes are typically determined post-consent, prior to the build, but those in the archaeologically-sensitive areas have already been fixed to ensure that potential impacts to the buried archaeological resource can be understood and addressed.

3.15 Cable trenches will extend directly from 8 rows of panels in the above-ground foundation zone in Field 9, 6 rows of panels in the above-ground foundation zone in Field 10, and 6 rows of panels in the above-ground foundation zone in Field 12 (Appendix 1); and from outside the north-western corner of the exclusion zone in Field 5, through the railway underpass, and in an anticlockwise direction along the eastern, northern and western margin of Field 6 (Appendix 4). These cable trenches require excavation up to 1600mm below present ground level to a width of around 700mm (Appendix 4).

3.16 The battery stations, which typically comprise three containers housing one inverter and two batteries, will be installed within the western margins of Fields 10 and 11, in the centre of Field 9 (to the north-west of the above-ground foundation zone), outside the north-western corner of Field 6, along the western margin of Field 6 (to the north of the exclusion zone), within the eastern and southern margins of Field 3, and within the southern margin of Field 2 (Appendix 1). The footprint of each battery station requires excavation up to 300mm below ground level to lay a gravel base for the containers (Appendix 5).

3.17 A total of 94 drainage swales are proposed across the site (Appendix 1). None lie within Field 5. Eight lie within 10m of the exclusion zone in Field 4 (Plate 4), four lie within 10m of the exclusion zone in Field 6 (Plate 5), and two lie within 10m of the above-ground foundation zone in Field 10 (Plate 6). No drainage swales are within 10m of the above-ground foundation zones in Fields 9 and 12.

3.18 The swales require excavation to 525mm below present ground level, the removed spoil forming a bund on the downhill edge. No excavations will take place within the exclusion or above-ground foundation zones.

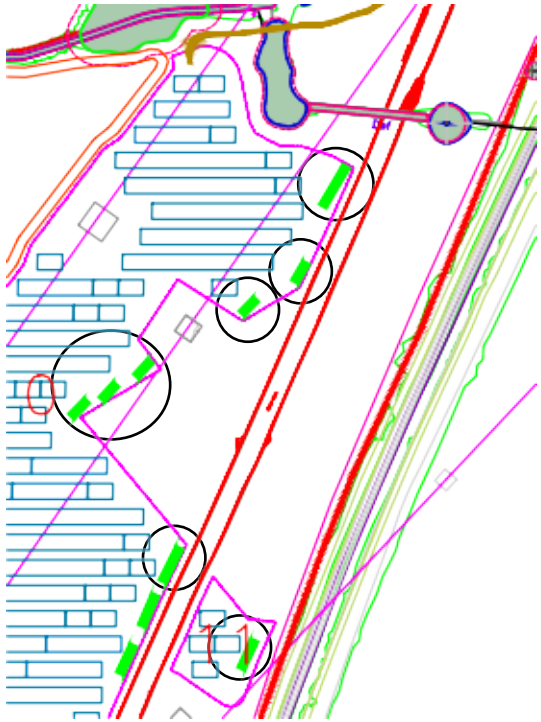

Plate 4: Extract from site layout showing the eight swales (circled) located within 10m of the exclusion zone in Field 4

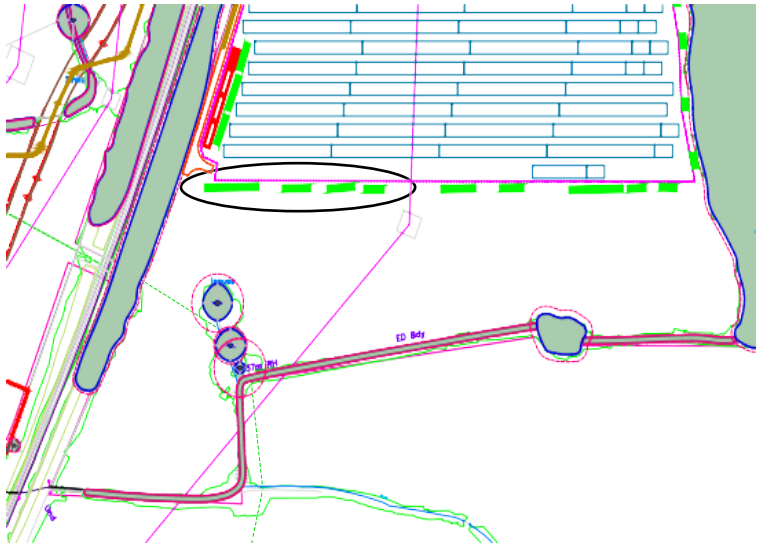

Plate 5: Extract from site layout showing the four swales (circled) located within 10m of the exclusion zone in Field 6

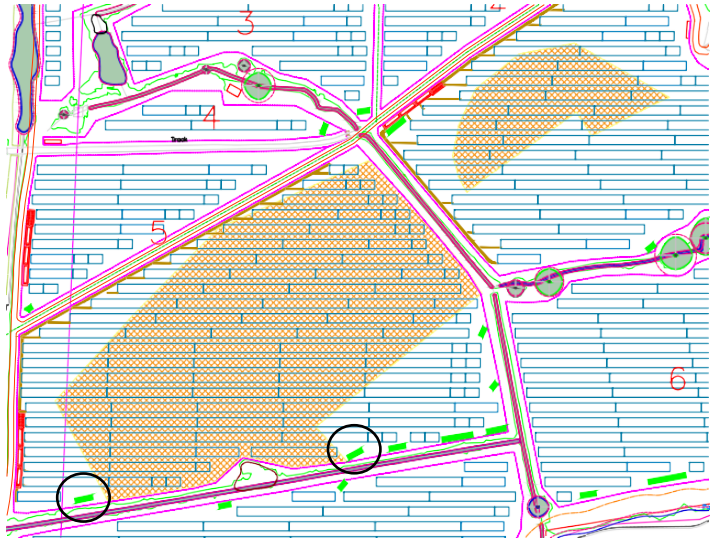

Plate 6: Extract from site layout showing the two swales (circled) located within 10m of the above-ground foundation zone in Field 10

3.19 Each block of arrays will be enclosed by wire-and-post deer fencing, with CCTV cameras mounted on poles (Appendix 2).

Archaeological monitoring

3.20 It is not considered necessary or practical to mitigate impacts to the buried archaeological resource from piling or fencing. This infrastructure is not located within the archaeologically-sensitive exclusion or above-ground foundation zones.

3.21 The excavation of all high voltage cable trenches (the routes of which are yet to be determined); the low voltage cable trenches leading away from the above-ground foundation zones in Fields 9, 10 and 12, and around the perimeter of Field 6; the installation of all battery stations; and the excavation of the 11 drainage swales that lie within 10m of the exclusion zones and above-ground foundation zones; will be monitored by a suitably-qualified and experienced archaeologist of a CIfA Registered Organisation in accordance with a WSI prepared by the contracted archaeological unit and approved in advance by Melanie Pomeroy-Kellinger (or her representative or successor).

Landscaping

3.22 Seeding of the site will take place before any other construction groundworks. This typically entails cultivation (tilling) to 100mm below present ground level and then spreading seed across the bare earth. Further seeding will take place post-construction in any areas adversely affected by vehicle tracking. The Planting Plan is shown on Appendix 1.

<u>Transitional Iron Age to Roman settlement</u>

3.23 The land beneath the ground-mounted arrays within the above-ground foundation zones in Fields 9, 10 and 12 will be sown with a Long Term Grazing Mix. The western boundary of Field 12, outside the above-ground foundation zone, will be enhanced by new hedgerow and tree planting. The existing hedgerow within the eastern margin of Field 10, outside the above-ground foundation zone, will be enhanced with new planting. The field margins of all three areas will be sown with a Standard General Purpose Meadow Mix.

3.24 There will be no cultivation (tilling) within the above-ground foundation zones, to avoid truncation of buried archaeological

deposits. Grass seed will be dispersed using a hand-pushed spreader; no heavy machinery or equipment will be deployed. No other vegetation, or trees, will be planted within the above-ground foundation zones at this or any other time.

Roman roadside settlement

3.25 Landscaping of the development exclusion zones in Fields 4, 5, and 6 will be undertaken once the arrays and infrastructure have been installed elsewhere within the site.

3.26 First, the Heras fencing will be removed to facilitate access to the areas. This will entail the manual detachment of the panels from their bases and from one another, and the collection of the panels and their bases.

3.27 The areas will then be sown with a Standard General Purpose Meadow Mix. This will provide suitable surface coverage of the Roman roadside settlement areas with no risk of root damage to the underlying buried archaeological deposits. The existing mature hedgerow and tree group at the southern boundary and to the west of centre of Field 5 will be retained.

3.28 There will be no cultivation (tilling) within the exclusion zones, to avoid truncation of buried archaeological deposits. Grass seed will be dispersed using a hand-pushed spreader; no heavy machinery or equipment will be deployed. No other vegetation, or trees, will be planted within the exclusion zones at this or any other time.

4. Management During Operation

General

4.1 Operation and maintenance activities requiring vehicle access to the site will include:

- **Planned maintenance and testing;**
- **Unplanned maintenance activities (repairs);**
- **Array cleaning;**
- **Maintenance of all areas of new planting for 12 months following practical completion of the development:**
    - **Weeding by hand or using approved herbicides in April, June and August;**
    - **Clearance of litter from the planting beds;**
    - **Watering of all new trees and shrubs weekly from May to the end of September;**
    - **Hedgerow pruning and replacement of any dead, dying or diseased hedge plants and trees in the first growing season;**
    - **Checking and replacing tree stakes and guards, and removing these once trees are fully established in or after the second growing season.**

4.2 It is anticipated that typical vehicle movements will entail small vans or 4x4s. As each block of arrays will be enclosed by deer fencing, there will be no vehicular access into the development exclusion zones. The railway underpass will not be used as a vehicular shortcut between Fields 5 and 6.

4.3 The grazing grass beneath the solar arrays in the above-ground foundation zones in Fields 9, 10 and 12 will be maintained by sheep. The meadow grass in the exclusion zones in Fields 4, 5 and 6 will be left ungrazed. The existing trees in the exclusion zone of Field 6 will be pruned if and when necessary.

4.4 For the grazing grass and meadow grass, one or possibly two cuts will be taken per year. This will comprise an early cut in February (if necessary) to manage regrowth around the arrays, and a second in late August/September. Grassed areas along hedgerow bases will be cut less frequently once established, with a single main cut in late August/September.

4.5 Grass cutting in the exclusion zones will be undertaken using a lightweight 'ride-on mower' and not a tractor, and only during dry ground conditions to prevent unnecessary soil churning and potential damage to underlying archaeological deposits by the mower wheels.

4.6 Melanie Pomeroy-Kellinger (or her representative or successor) will be informed if the removal of the existing trees in Field 6 is

required, such that a suitable methodology can be agreed (e.g. felling to ground level and applying herbicide to the tree stump, rather than attempting to uproot).

4.7 Should any below-ground damage to the archaeologically-sensitive areas be noted (e.g. arising from sheep grazing, wild animal burrowing and/or use of the public footpath through Fields 5 and 6) or caused during the operation and maintenance works, Melanie Pomeroy-Kellinger (or her representative or successor) will be informed so that any exposed archaeological deposits can be investigated and recorded and the need for any remedial works can be discussed, agreed and implemented.

4.8 Heavier plant will be required only for more significant repairs such as the re-mounting or replacement of arrays. For any such work in Fields 4, 5 and 6, Heras fencing will be re-installed around the Roman roadside settlement remains to ensure that vehicles do not encroach into these areas. For any such works in Fields 9, 10 or 12, Terrafirma matting will be laid to protect the underlying archaeological deposits here.

4.9 Contractors will be informed of the archaeological constraints before entering the site.

5. Management During Decommissioning

Protection during decommissioning

5.1 Decommissioning of the development will entail:

- **The unscrewing of the arrays from the mounting frames, the removal of the mounting frame horizontal poles and the pulling of the piles from the ground using a tracked pile driver;**
- **The unscrewing of the arrays from the mounting frames, the removal of the mounting frame horizontal poles and the removal (by a 'scooping' action) of the Monobloc slabs from the underlying gravel drainage base using a tracked forklift on Terrafirma matting;**
- **The disconnection and removal (by opening and pulling from one end of a single trench) of all cabling buried less than 1200mm below ground level;**
- **The removal of the battery station containers using a crane and HGVs for transportation;**
- **The removal of fencing and CCTV equipment and the backfilling of any holes left by the fence posts and poles;**
- **The retention and/or removal of access tracks;**
- **The harrowing and re-seeding in grass of most areas of disturbed ground and the retention or infilling of swales with new topsoil.**

5.2 As for the construction phase, Heras fencing will be re-erected around the development exclusion zones in Fields 4, 5 and 6, to ensure that no plant or vehicles inadvertently encroach onto these areas. Lightweight vehicles and Terrafirma matting will again be used to access the above-ground foundation zones in Fields 9, 10 and 12, to safeguard buried archaeological deposits. These protocols will be outlined in relevant method statements and form part of the briefing to on-site personnel.

5.3 The landscaping treatment with meadow grass of the areas of archaeological sensitivity in Fields 4, 5, and 6 will be retained without harrowing or other groundworks.

Appendix 1: Development Layout

(Updated to reflect the reduced above-ground foundation zone in Field 9)

N

REVISIONS:

– Initial design

Legend:

- Inverter
- Battery stations
- Spare containers
- Customer switchgear container
- Solar panels
- Ballasted solar system
- Perimeter fence
- Water courses and water bodies
- Public Rights of Way
- Overhead lines
- Access road
- Access gate
- Banks
- Planning Redline
- Hedges
- Access road with TRP membrane
- HV/LV cabling routes
- Swale

Badger set B2

Badger set B1 (disused)

Section C-C'

12000 – 20000

Variable pitch distance
depending on ground conditions

SCALE A1 @ 1:4000

0m 80m 160m 240m 320m 400m

JBM SOLAR

DATE: 9 November 2023

TITLE:
Solar Farm Layout

PROJECT TITLE:
Wick Farm (Melksham)

LOCATION:
SN15 2LU

CONFIGURATION:
3 Modules in portrait

REV: A

FILENAME: 20220623_NG03_3P570_Layout_A.dwg

Appendix 2: Perimeter Fencing & Access Tracks

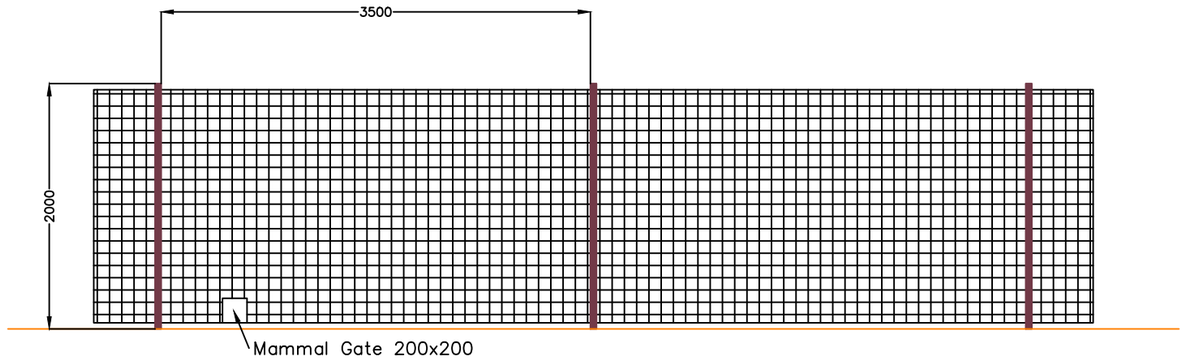

Timber post & wire fence

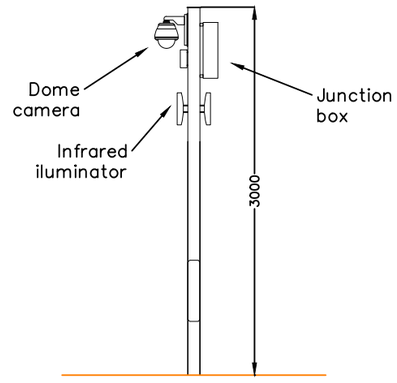

CCTV pole

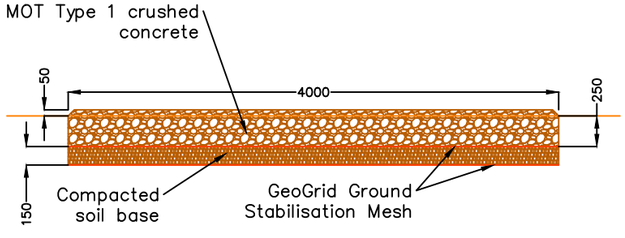

Access track cross section

SCALE A3 @ 1:50

0 400 800 1200 1600 2000

N

REVISIONS:

– Initial design

NOTES:

–

JBM SOLAR

DATE: 14 May 2020

TITLE: Typical Fence, Track & CCTV

PROJECT TITLE: Wick Farm

LOCATION: SN15 2LU

CONFIGURATION: –

REV: A

FILENAME: Typical Fence, Track & CCTV Details.dwg

Appendix 3: Monobloc & Cable Suspension System

Table back view – cable suspension system

Table side view – cable suspension system

scale 1:100 @A3

REVISIONS:

- Initial design

NOTES:

- Modules can be arranged in portrait or landscape configuration.

JBM SOLAR

DATE: 22 September 2021

TITLE:
Typical ballasted PV table cabling details

PROJECT TITLE:
Wick Farm

LOCATION:
Land near to SN15 2LU

REV: A

FILENAME: Typical ballasted PV Table Details 4P.dwg

Birdseye view – 4 modules in portrait
scale 1:200 @A3

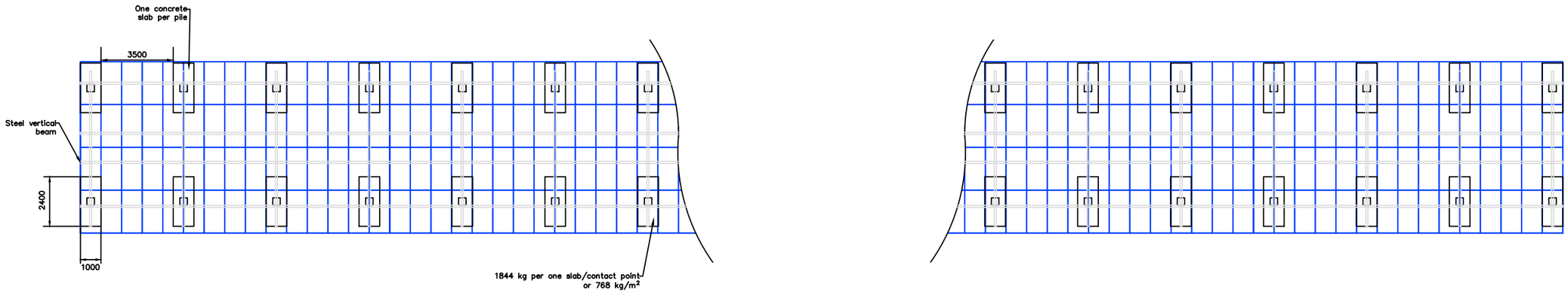

Table side view
scale 1:50 @A3

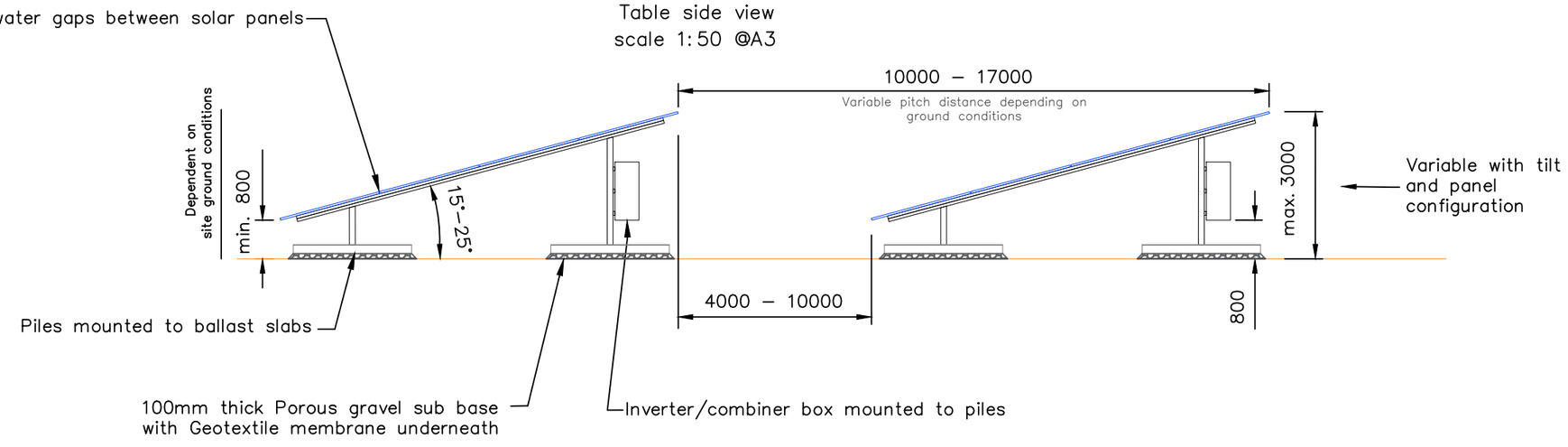

Ground cross–section side view (not to scale)

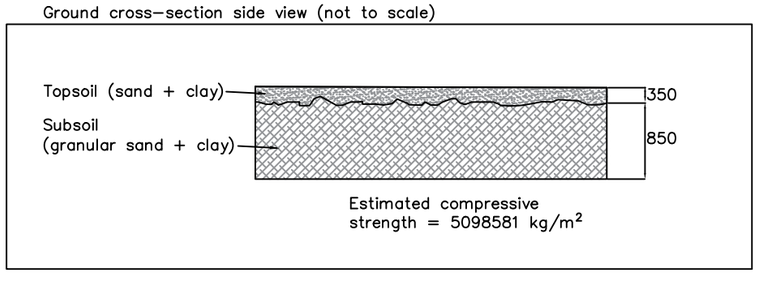

Table 1: Constituents of a contact point

Item name	Weight [kg]
15 PV Panels	420
PV frame for 15 panels	45
Solar inverter for 15 Panels	90
Shingle layer	379
Concrete slab	1000
TOTAL weight	1844

N

REVISIONS:

– Initial design

NOTES:

– Modules can be arranged in portrait or landscape configuration.

JBM SOLAR

DATE: 19 January 2021

TITLE: Typical ballasted PV table details

PROJECT TITLE: Wick Farm

LOCATION: Land near to SN15 2LU

REV: A

FILENAME: Typica ballasted PV Table Details 4P.dwg

Appendix 4: Buried Cable Trenches

Typical DC trench
open ground

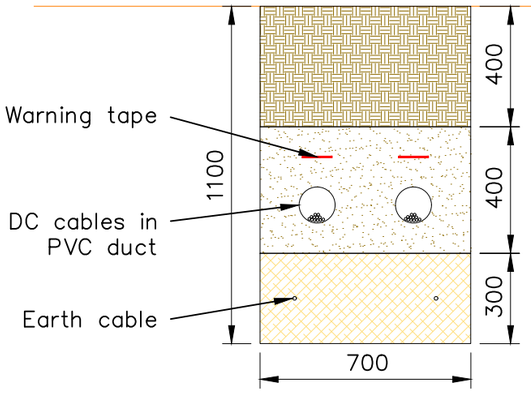

Typical LV AC trench
open ground

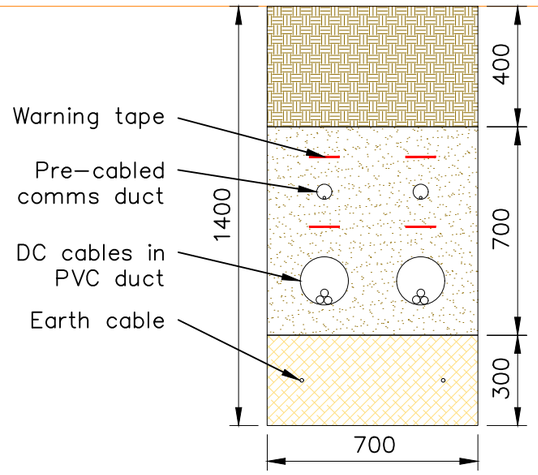

Typical HV AC trench
open ground

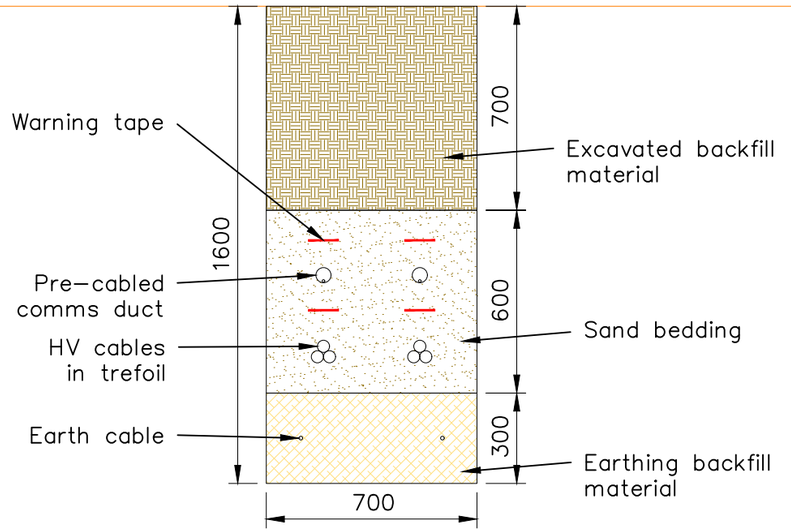

Typical DC trench
roadway/crossing points

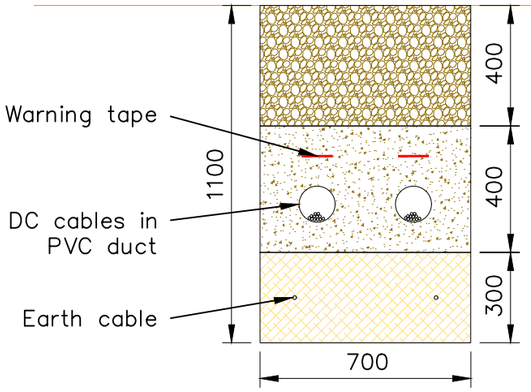

Typical LV AC trench
roadway/crossing points

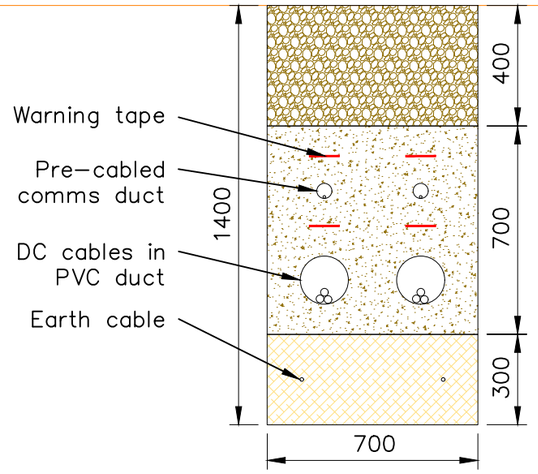

Typical HV AC trench
roadway/crossing points

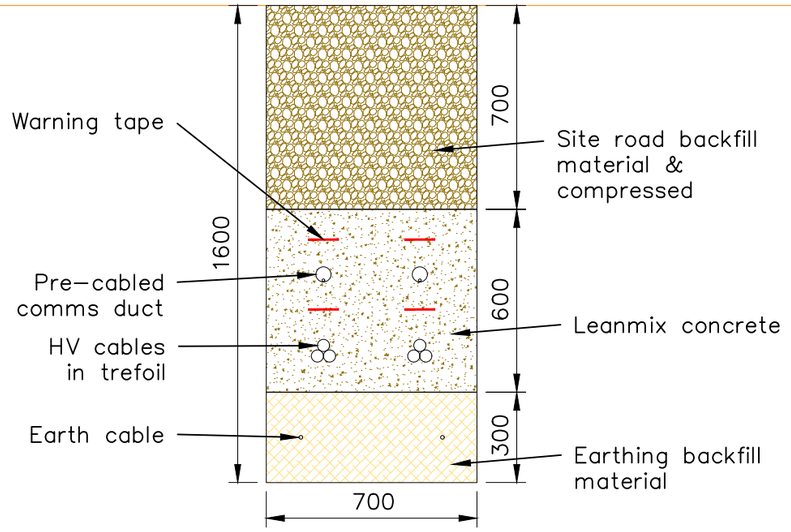

N

REVISIONS:

– Initial design

NOTES:

– Design not to scale

JBM SOLAR

DATE: 14 May 2020

TITLE: Typical Trench Sections Details

PROJECT TITLE: Wick Farm

LOCATION: SN15 2LU

CONFIGURATION: –

REV: A

FILENAME: Typical Trench Section Details.dwg

Appendix 5: Battery Stations

Battery storage system
Top view

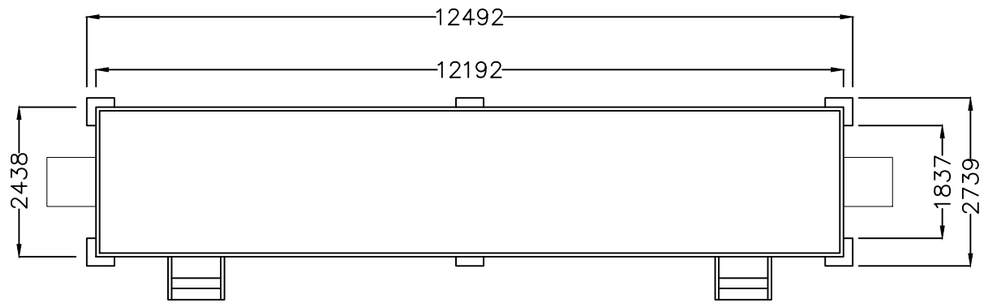

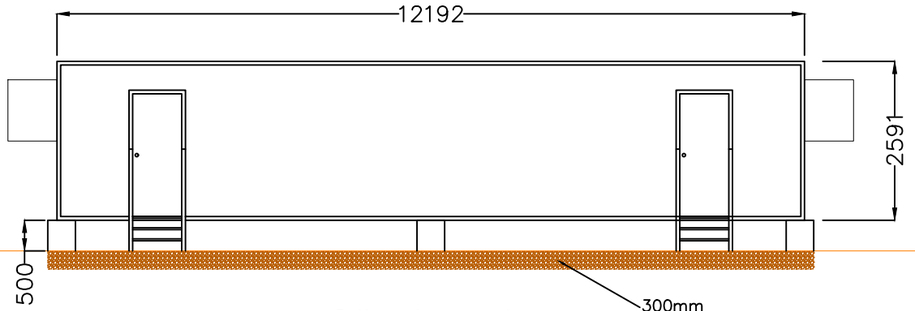

Battery storage system
Front view

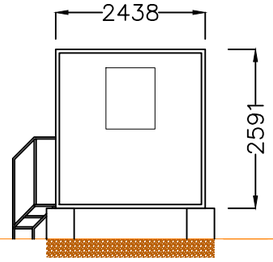

Battery storage system
Side view

SCALE A3 @ 1:100

0 1000 2000 3000 4000 5000

N

REVISIONS:

– Initial design

NOTES:

–

JBM SOLAR

DATE: 14 May 2020

TITLE:
Battery Storage System Details 1

PROJECT TITLE:
Wick Farm

LOCATION:
SN15 2LU

CONFIGURATION:
–

REV: A

FILENAME: Typical Battery Storage System Details 1.dwg

Battery storage system – auxiliary equipment
Top view

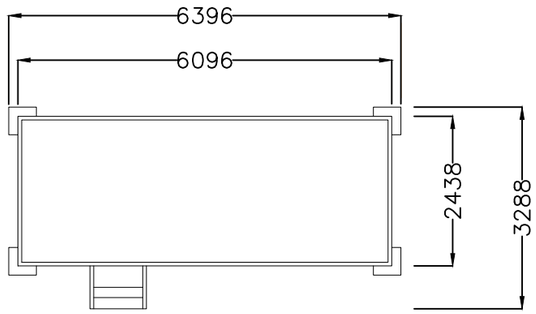

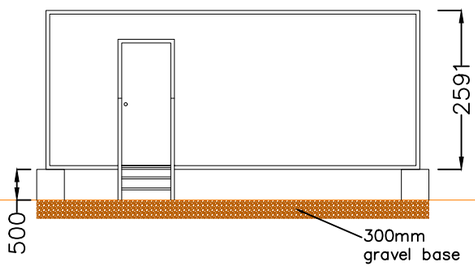

Battery storage system – auxiliary equipment
Front view

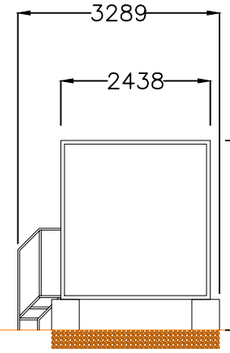

Battery storage system – auxiliary equipment
Side view

SCALE A3 @ 1:100

0 1000 2000 3000 4000 5000

N

REVISIONS:

– Initial design

NOTES:

–

JBM SOLAR

DATE: 14 May 2020

TITLE:
Battery storage system – auxiliary equipment Details

PROJECT TITLE:
Wick Farm

LOCATION:
SN15 2LU

CONFIGURATION:
–

REV: A

FILENAME: Typical Battery Storage System Details 2.dwg

Appendix 6: Strip Map & Sample Excavation Areas
(As completed in 2023, with minor adjustments to original 2021 extents)

168400
168200
168000
167800
390400
390600
390800
391000
WICK LANE
FOLLY LANE WEST
Field 12
Field 11
Field 10
Field 9
Field 8
Field 7
1
2
3
4
5
0
130m
N
Gastard
Lacock
Whitley
Beanacre
Goodes Hill
Corsham Road
© OpenStreetMap (and) contributors, CC-BY-SA

Legend

- Site Boundary
- Proposed excavation area
- Previous evaluation trench
- 20m safetry buffer around badger's sett
- Services
- PROW
- Overhead Power
- Overhead Power Buffer

© Crown copyright and database rights 2023 Ordnance Survey 0100031673

Cotswold Archaeology
Andover 01264 347630
Cirencester 01285 771022
Milton Keynes 01908 564660
Suffolk 01449 900120
w www.cotswoldarchaeology.co.uk
e enquiries@cotswoldarchaeology.co.uk

PROJECT TITLE
Land at Wick Farm, Lacock

FIGURE TITLE
Proposed Excavation Areas

DRAWN BY	DGL	PROJECT NO	CR1414	FIGURE NO.
CHECKED BY	MF	DATE	19/05/2023	2
APPROVED BY	MF	SCALE@A3	1:2,500	

Document Path: P:\CR1414 Land at Wick Farm Lacock Excl\GIS\ArcGIS Pro\CR1414_survey_master.aprx