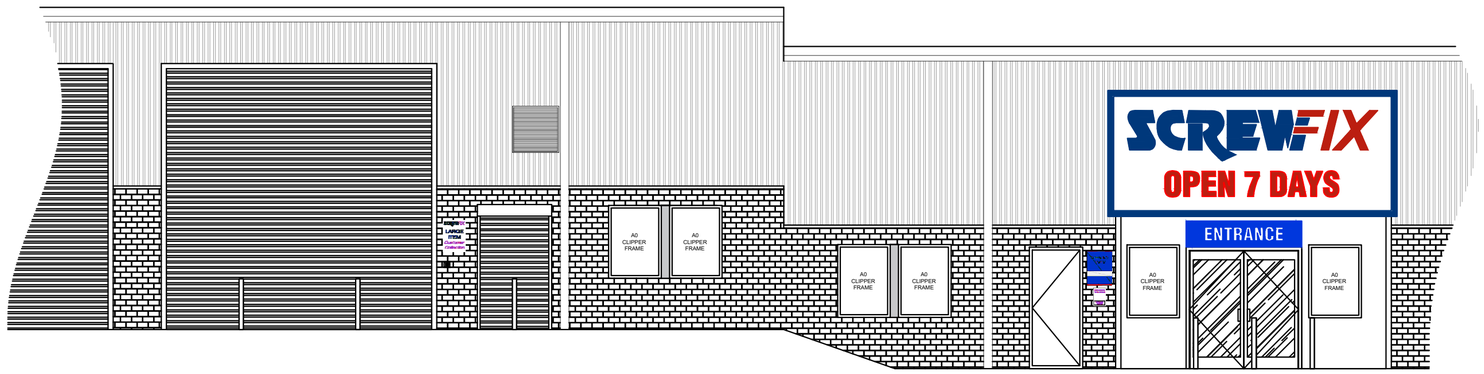

PROPOSED FRONT ELEVATION A
SCALE 1:75

Scale bar @ 1:75

0 3.75m 7.5m

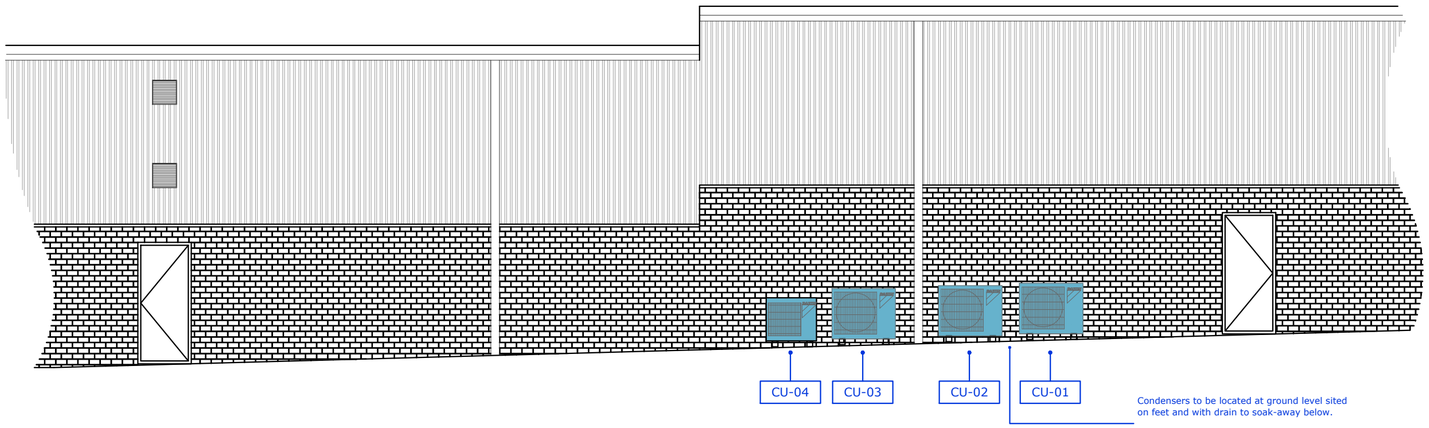

PROPOSED REAR ELEVATION B
SCALE 1:75

Scale bar @ 1:75

0 3.75m 7.5m

ELECTRICAL

CU01 - DAIKIN RZA250D @ 3ph, 380-415v, 20AMP FUSE. Isolator with tail left by EC
CU02 - DAIKIN RZA250D @ 3ph, 380-415v, 20AMP FUSE. Isolator with tail left by EC
CU03 - DAIKIN RZA250D @ 3ph, 380-415v, 20AMP FUSE. Isolator with tail left by EC
CU04 - DAIKIN RZASG71MV1 @ 1ph, 240v, 20AMP FUSE. Isolator with tail left by EC

TOTAL ADDITIONAL LOAD (by fuse rating) = 3PH 60A + 1PH 20A

DETAILS

- PIPEWORK TO CONDENSERS C/W COWL.
- KEEP EXTERNAL PIPEWORK TO A MINIMUM.
- 4No AC CONTROLLERS TO BE INSTALLED IN MANAGERS DESK TRUNKING.
- 1No I-TAB CONTROLLER TO BE INSTALLED NEAR MANAGERS DESK TRUNKING.
- POWER WIRED IN BY ELECTRICIANS.

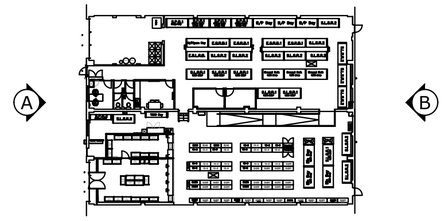

ELEVATIONS PLAN
SCALE 1:500





PHOTOS OF TYPICAL FLOOR MOUNTED AIR SOURCE HEAT PUMPS
NOT TO SCALE

COWL TO USE FOR SURFACE MOUNTING ON A CORRUGATED WALL, E.G. CLADDING

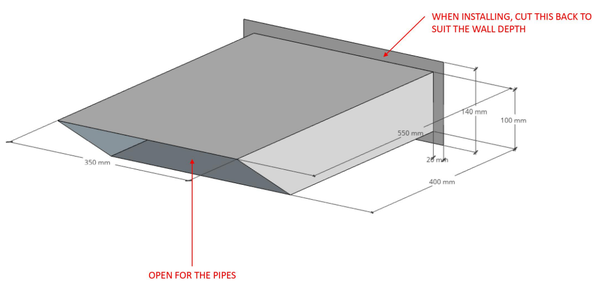

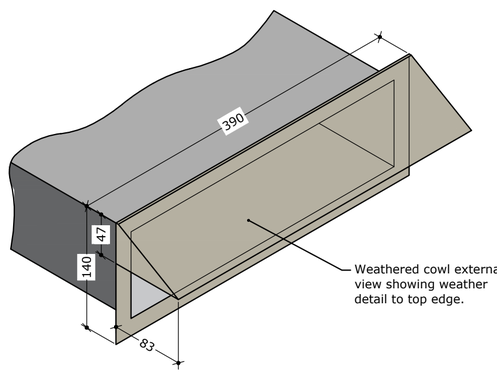

WEATHERED COWL EXTERNAL VIEW
SCALE 1:5

EQUIPMENT SCHEDULE

NO		TYPE	MODEL	PIPE SIZES (Ømm)		DIMENSIONS	VOLTAGE	FUSE
				LIQUID	GAS	H x W x D		
CU01 TO CU03	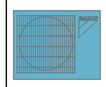	AIR SOURCE HEAT PUMP (3 No.)	DAIKIN RZA250D	9.5	25.4	870 x 1100 x 460mm	380-415v (3 PHASE)	20 AMP
CU04		AIR SOURCE HEAT PUMP (1 No.)	DAIKIN RZASG71MV1	9.52	15.9	770 x 900 x 320mm	240v (1 PHASE)	20 AMP
CA-01 TO CA-07		CASSETTE (8No)	DAIKIN FCAG125B	9.52	15.9	840 x 840 (950 x 950)	220-240v (1 PHASE)	
CA-08		CASSETTE (1No)	DAIKIN FCAG100B	9.52	15.9	840 x 840 (950 x 950)	220-240v (1 PHASE)	
F1 TO F8		DESTRAT FAN	VENT-AXIA HL90			Ø900mm	220-240v (1 PHASE)	

This drawing is the property of Bridgford Interiors Ltd (BIL) and is protected by the Design Copyright Act 1968. It must not be copied or reproduced without express written consent of BIL.

NOTES

REV	DESCRIPTION	BY	DATE

Drawing status:-

FOR PLANNING

Client:- SCREWFIX

Project:-

ASHP INSTALLATION

Address:-

Units G-H, Bumpers Way, Bumpers Farm Industrial Estate, Chippenham. SN14 6LH

Title:-

PROPOSED EXTERNAL ELEVATIONS

DWG No. 10706-103-04

Date Created	Revision
10-11-2023	-

Drawn By	Checked By	Scale	Sheet Size
RJW	CAD	1:75	A2

Please note: - No alterations may be made to the method of manufacture, materials specified & dimensions shown on this drawing without prior consultation with BIL cad dept. Any products specified on this drawing MUST be used in accordance with the manufacturers specification. Should any costs be incurred due to unconfirmed alterations the manufacturer may be liable.

BRIDGFORD INTERIORS
Bridgford Building
Wellington Crescent
Fradley Park
Lichfield
Staffordshire
WS13 8RZ