NORRSKEN

P31 ALUCLAD WINDOW - OPENING SILL

SCALE 1:1

* NB. variable 35.5 -7.5 mm
**NB. variable 92.0 -115.0 mm
***NB. variable 94 -122 mm

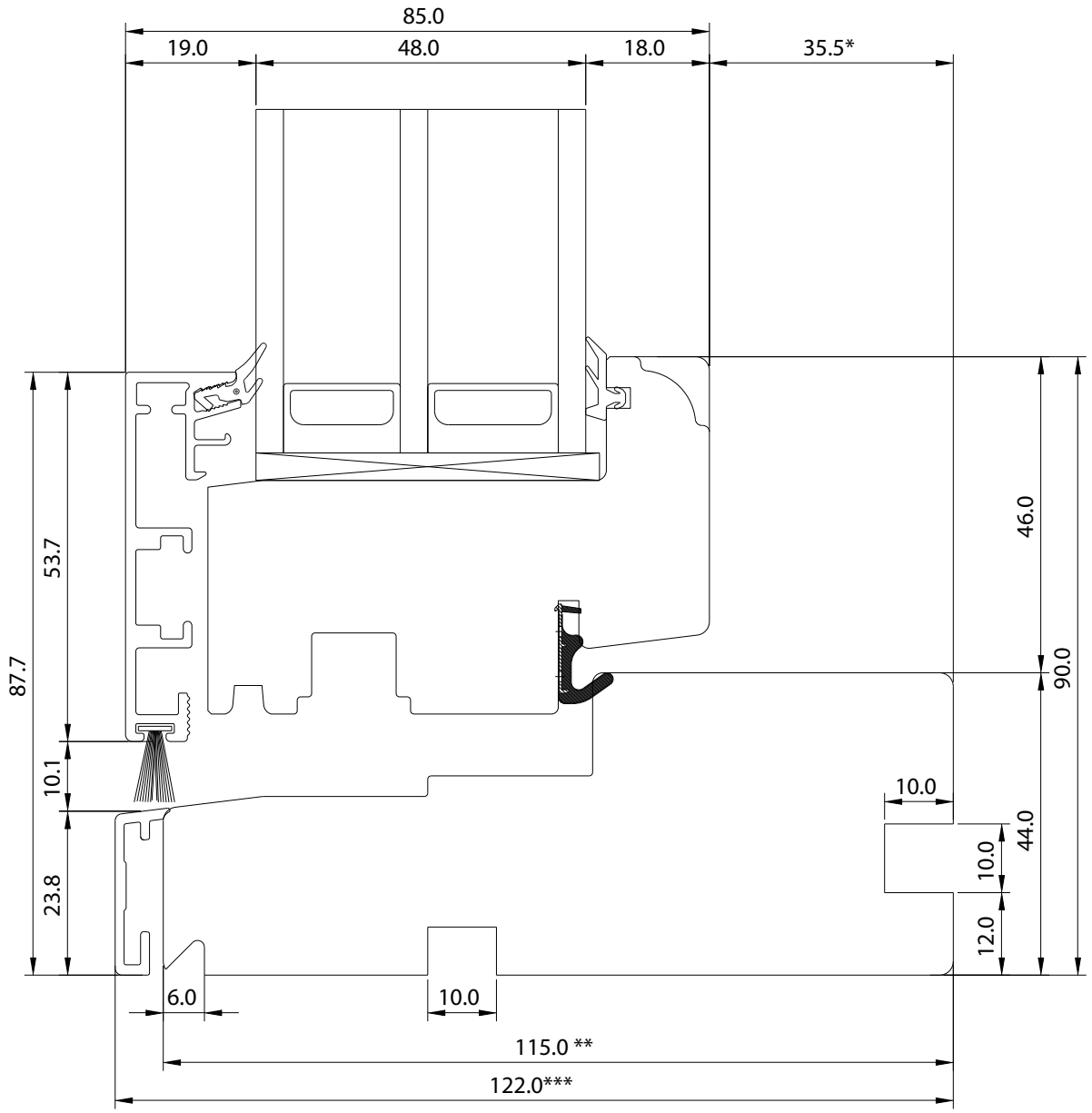

NORRSKEN

P31 ALUCLAD WINDOW - OPENING JAMB

SCALE 1:1

* NB. variable 35.5 -7.5 mm
**NB. variable 92.0 -115.0 mm
***NB. variable 94 -122 mm

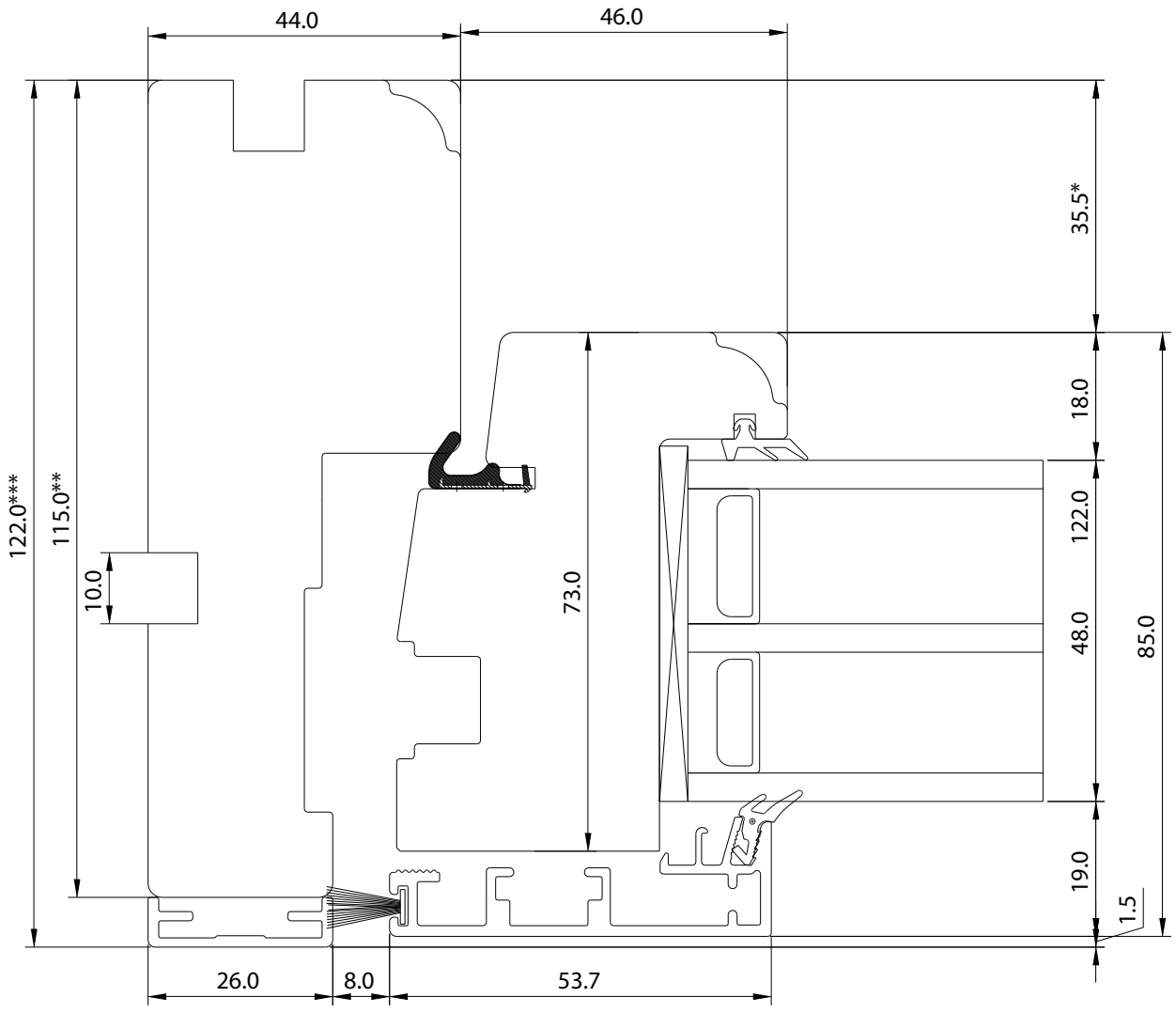

NORRSKEN

P31 ALUCLAD WINDOW - OPENING HEAD

SCALE 1:1

* NB. variable 35.5 -7.5 mm
**NB. variable 92.0 -115.0 mm
***NB. variable 94 -122 mm

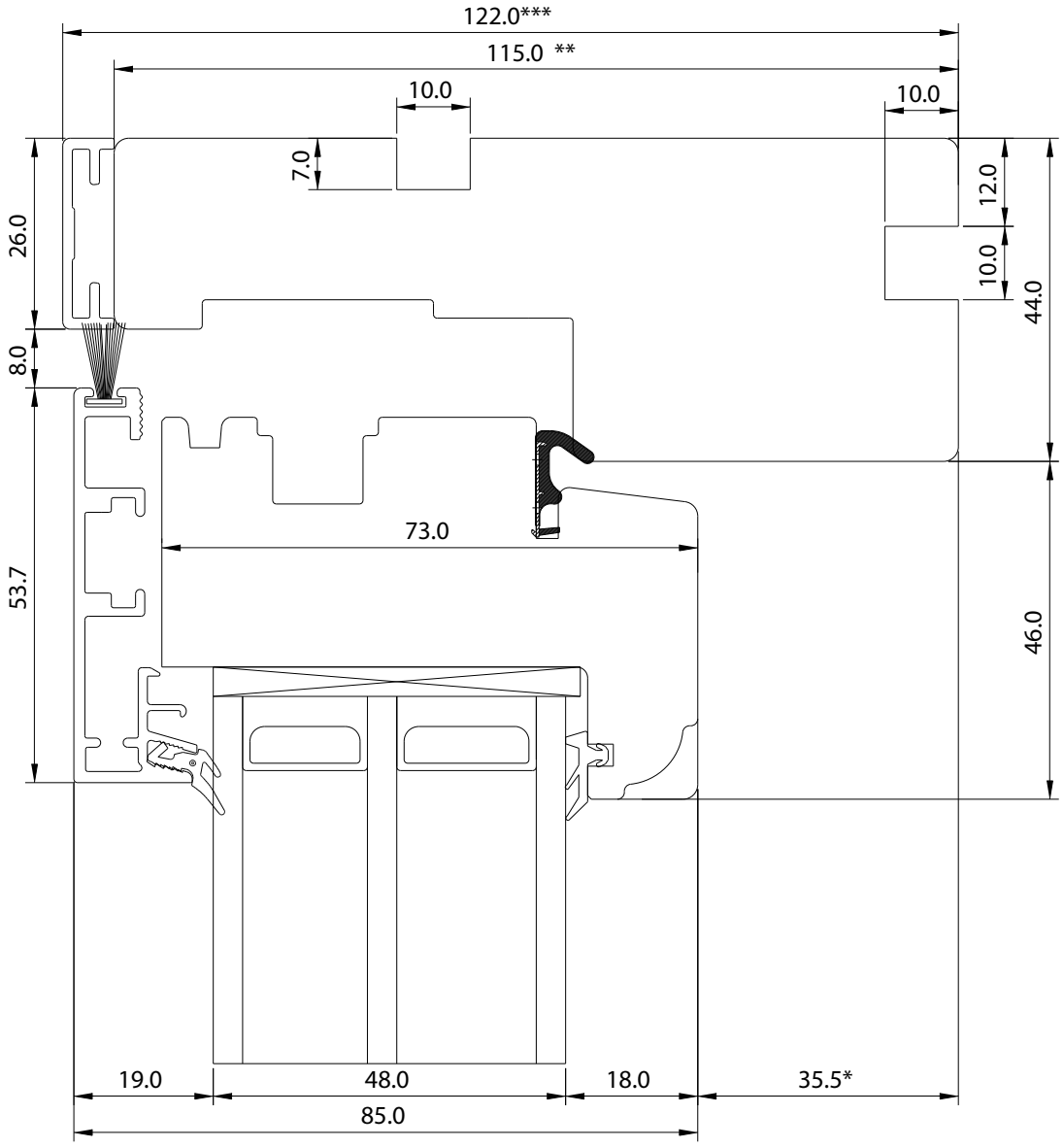

NORRSKEN

P31 ALUCLAD WINDOW - MULLION WITH SASHES

SCALE 1:1

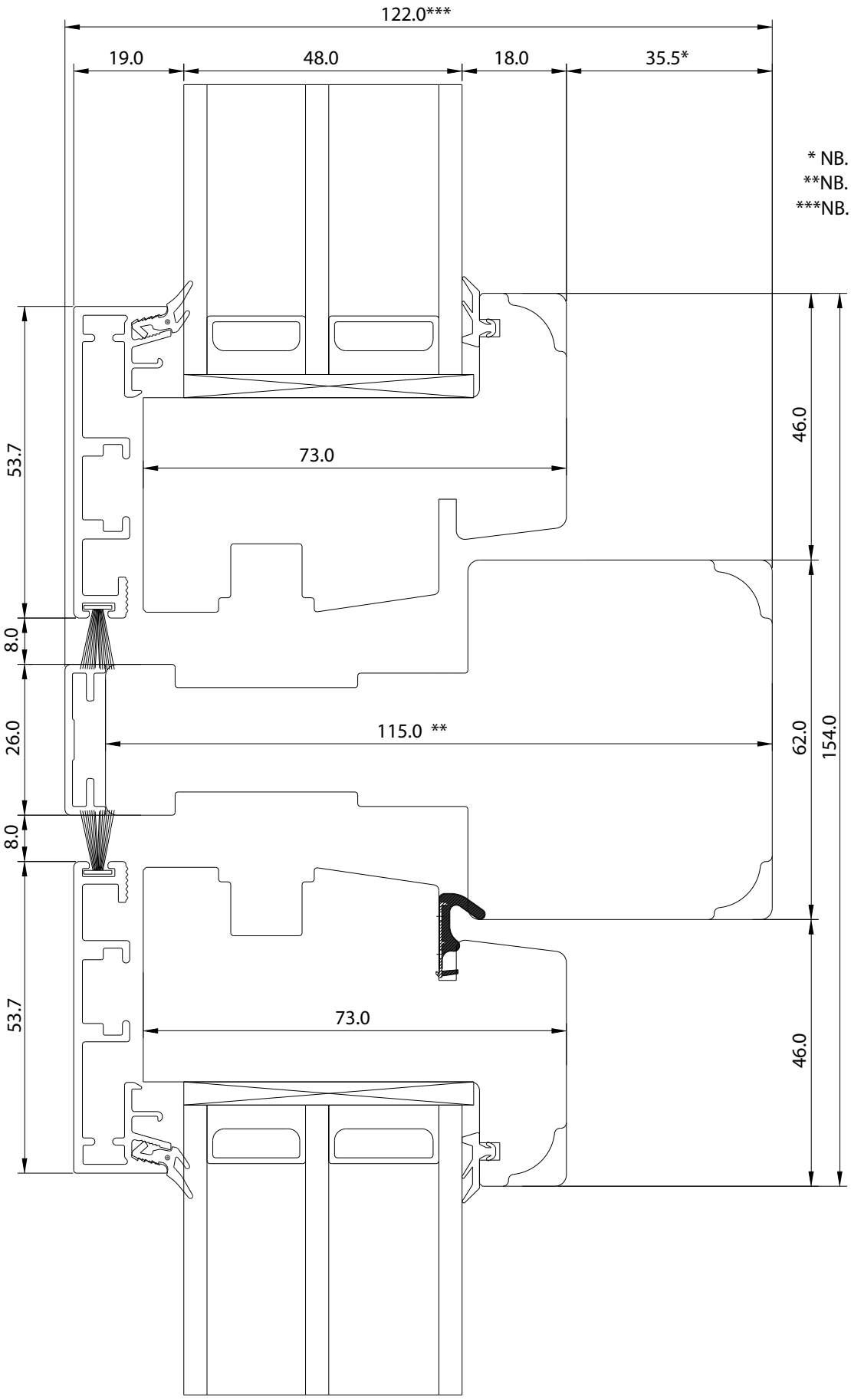

* NB. variable 35.5 -7.5 mm
**NB. variable 92.0 -115.0 mm
***NB. variable 94 -122 mm

NORRSKEN

P31 ALUCLAD WINDOW - OPENING DOUBLE SASH

SCALE 1:1

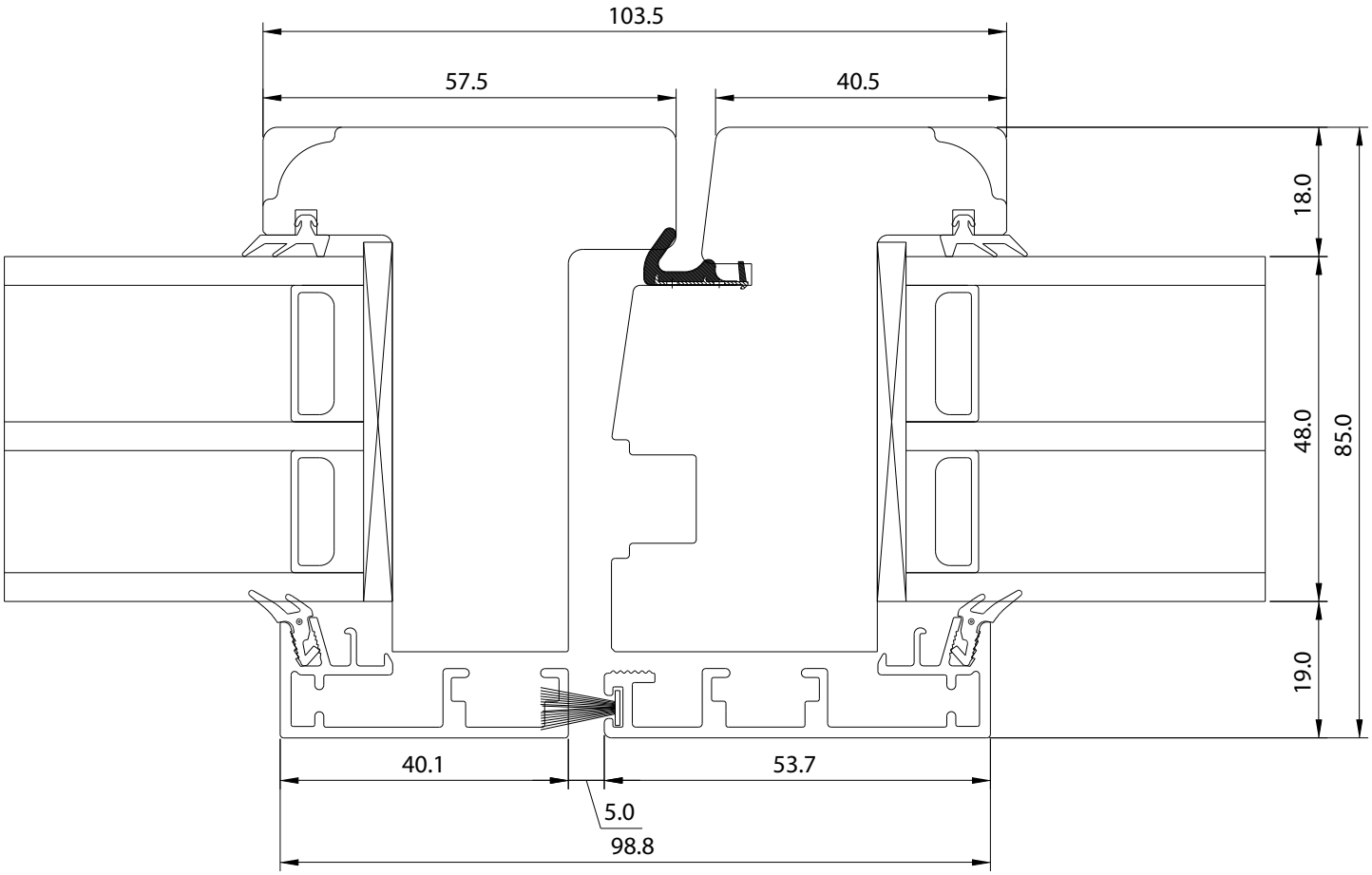

NORRSKEN

P31 ALUCLAD WINDOW - FIXED LIGHT SILL

SCALE 1:1

* NB. variable 24.5-52.5 mm
**NB. variable 92.0 -115.0 mm
***NB. variable 94 -122 mm

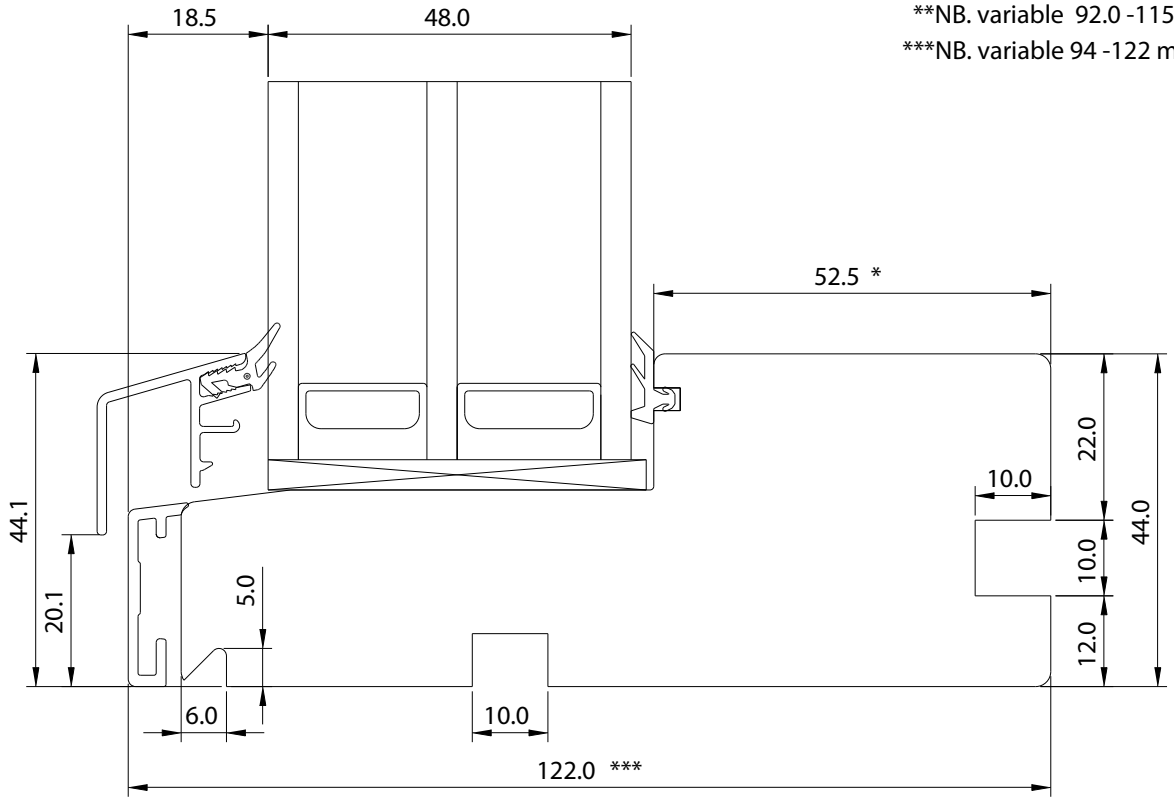

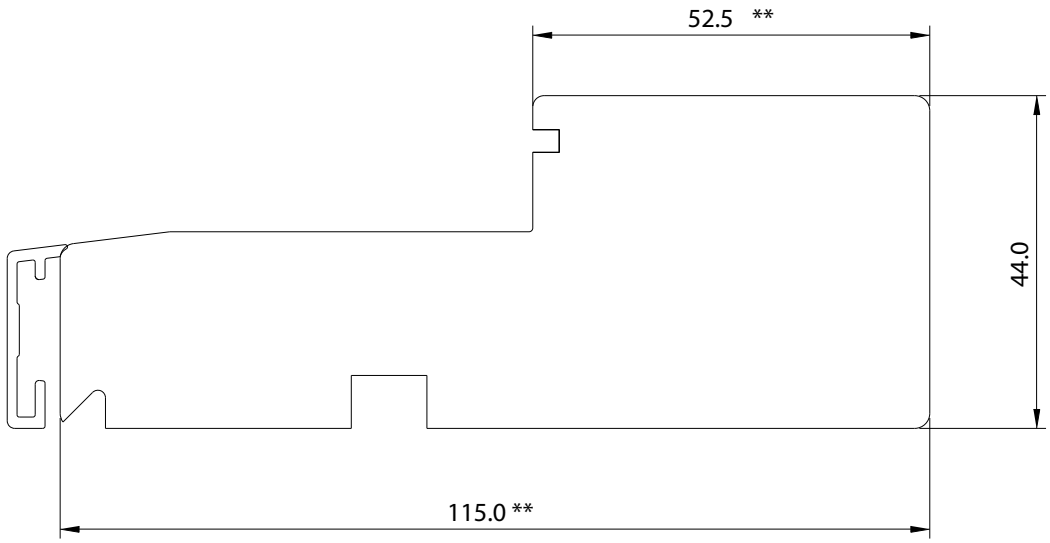

NORRSKEN

P31 ALUCLAD WINDOW - FIXED LIGHT JAMB

SCALE 1:1

* NB. variable 24.5-52.5 mm
**NB. variable 92.0 -115.0 mm
***NB. variable 94 -122 mm

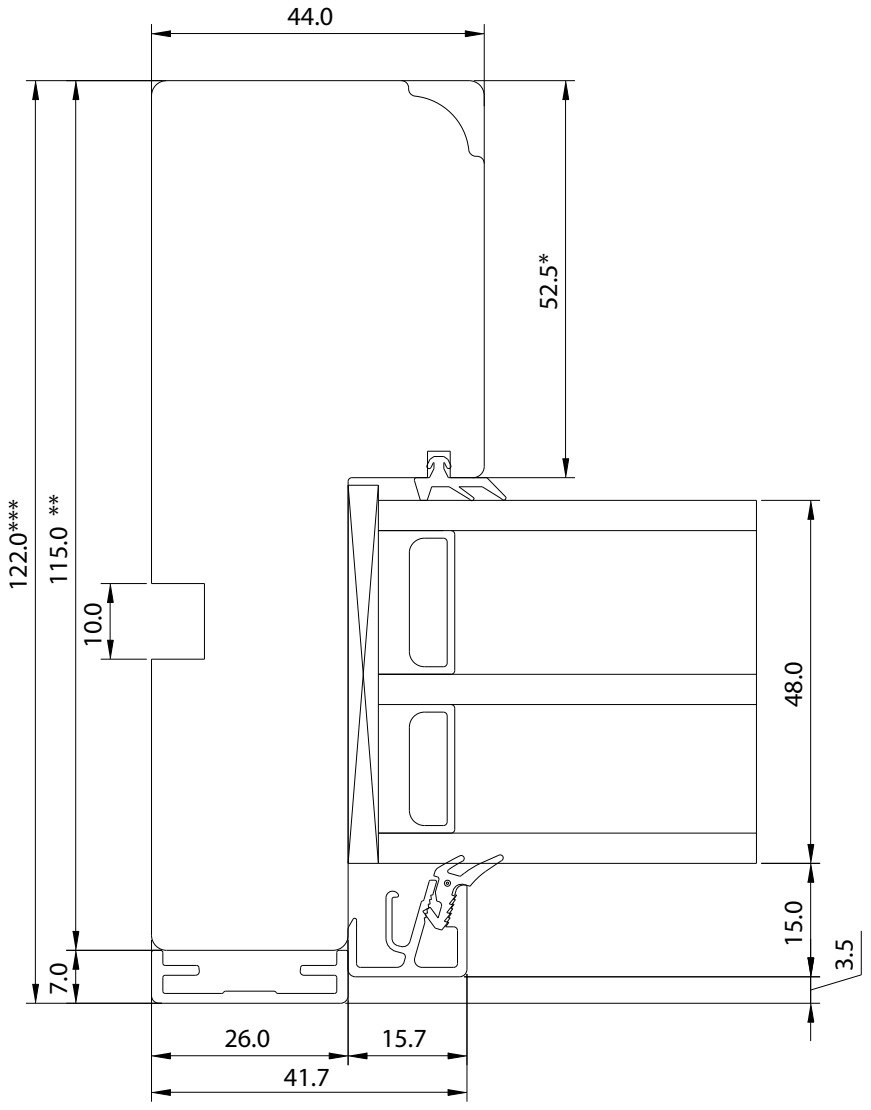

NORRSKEN

P31 ALUCLAD WINDOW - FIXED LIGHT HEAD

SCALE 1:1

* NB. variable 24.5-52.5 mm
**NB. variable 92.0 -115.0 mm
***NB. variable 94 -122 mm

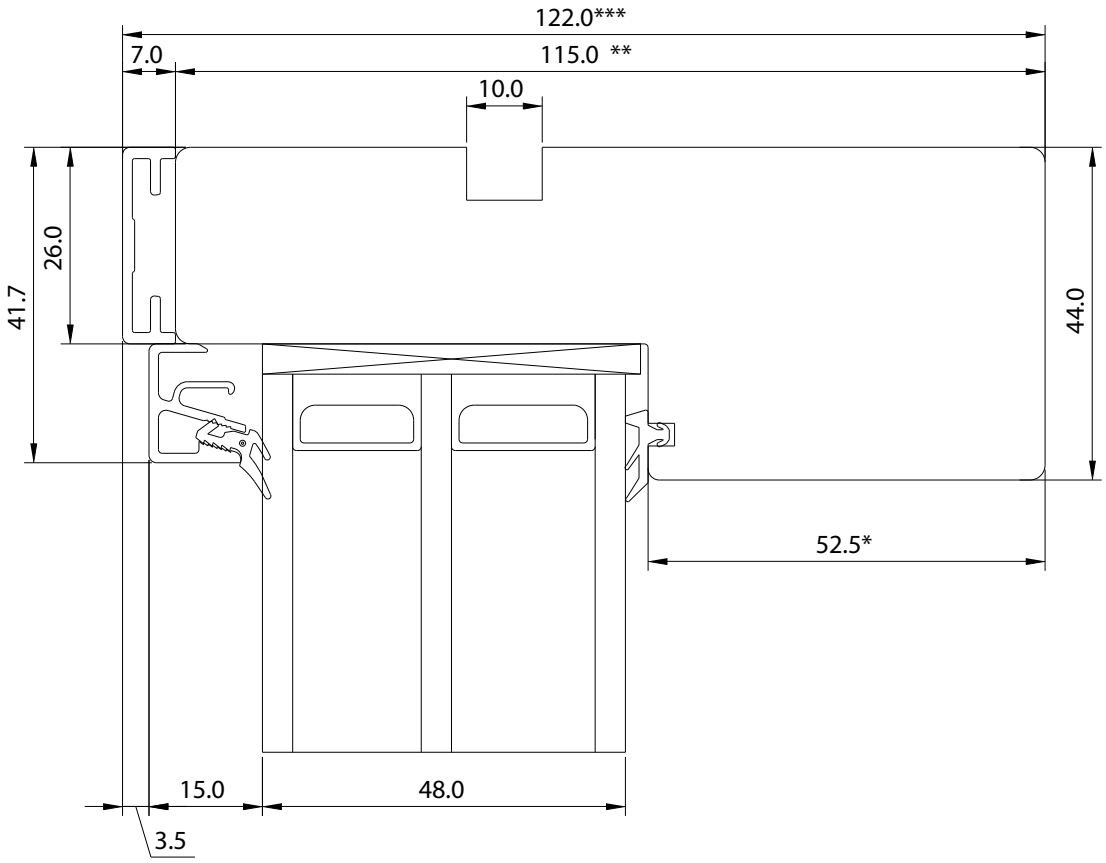

NORRSKEN

P31 ALUCLAD WINDOW - TRANSOM

SCALE 1:1

* NB. variable 35.5 -7.5 mm
**NB. variable 92.0 -115.0 mm
***NB. variable 94 -122 mm

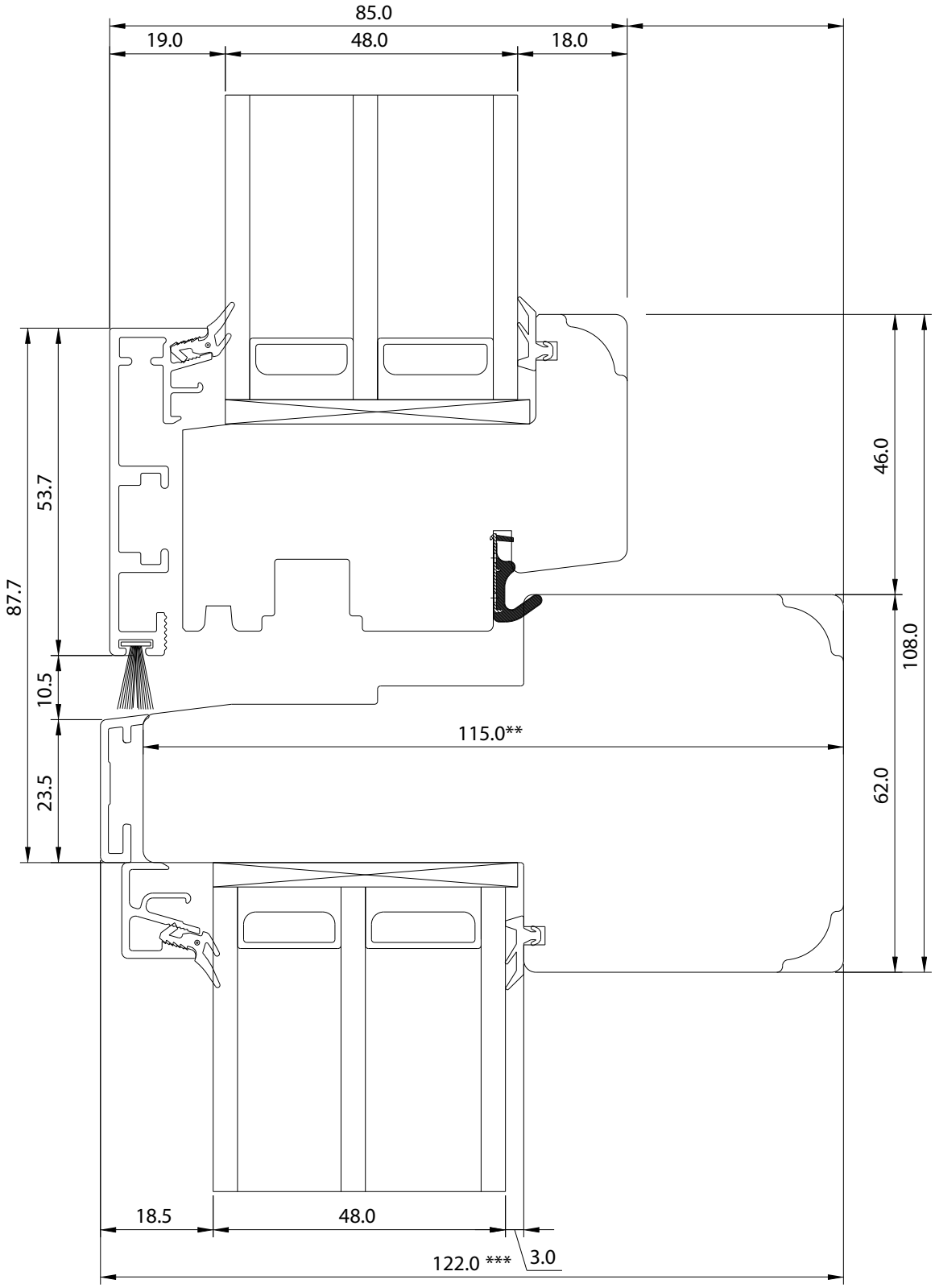

NORRSKEN

P31 ALUCLAD WINDOW - TRANSOM

SCALE 1:1

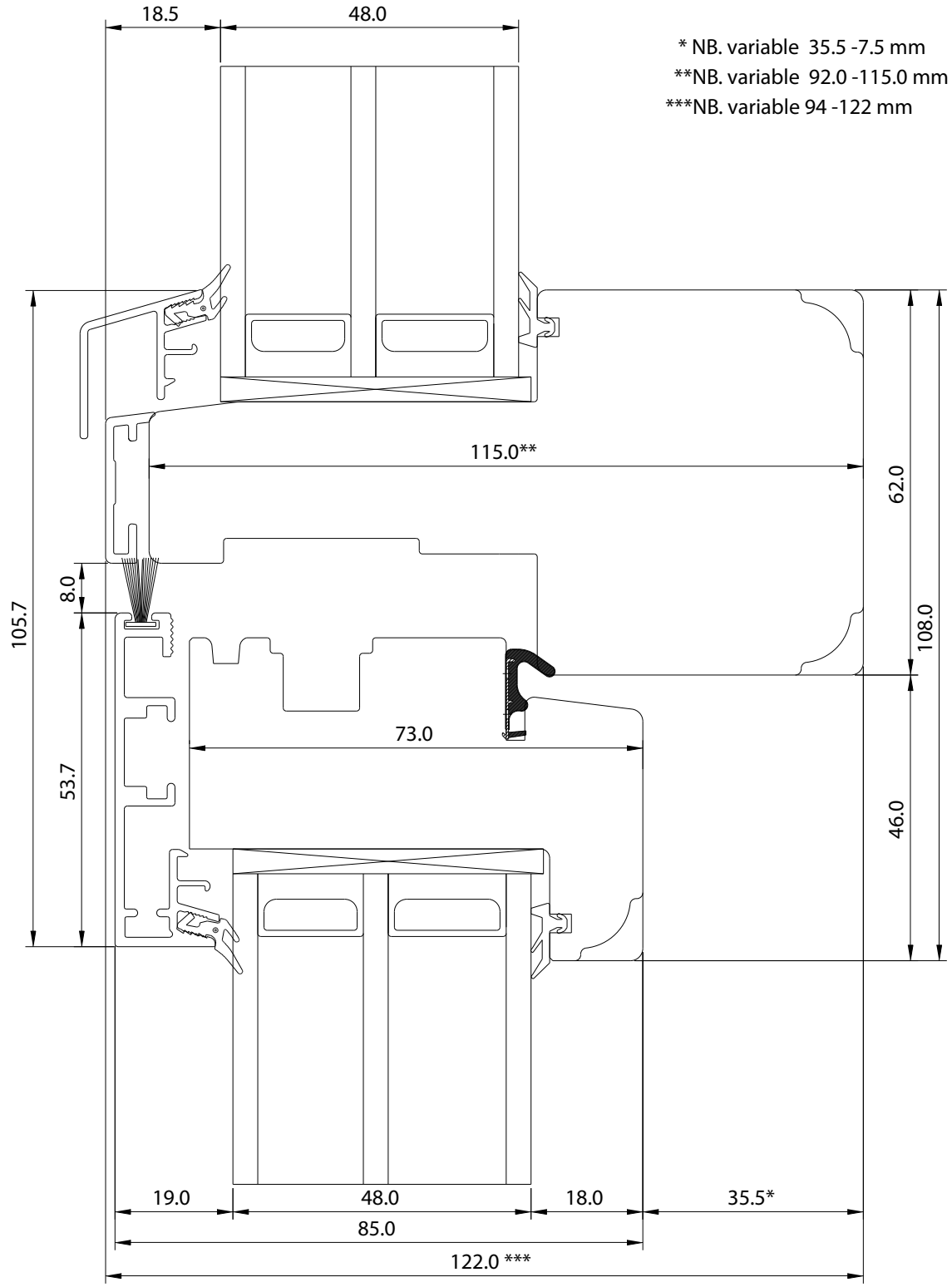

NORRSKEN

P31 ALUCLAD WINDOW - MULLION AND FIXED LIGHTS

SCALE 1:1

* NB. variable 24.5 - 52.5 mm
**NB. variable 92.0 -115.0 mm
***NB. variable 94 -122 mm

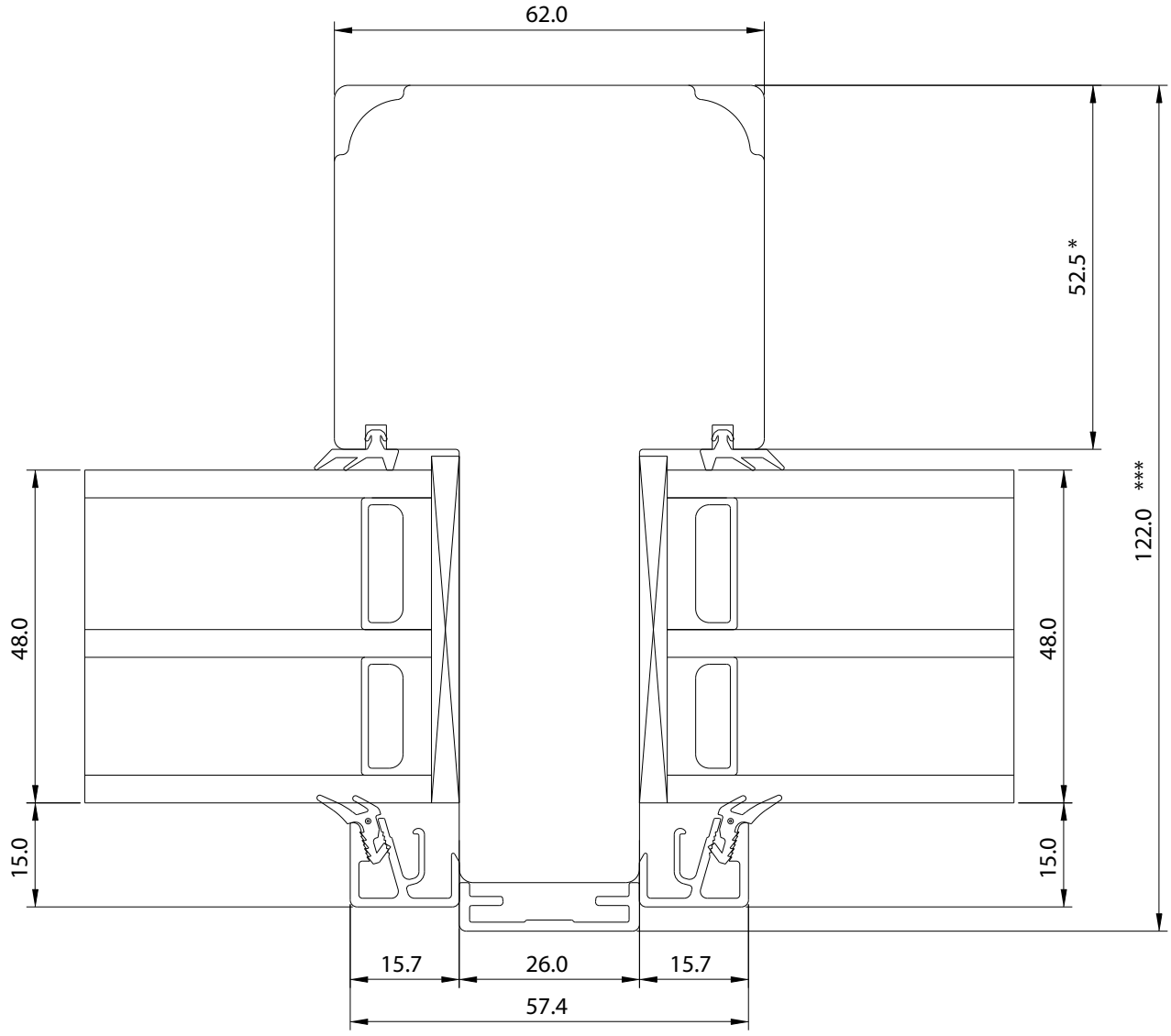

NORRSKEN

P31 ALUCLAD WINDOW - GLAZING BARS

SCALE 1:1

