waterman

		Sheet No:	1 of 1	Project No:	WIE19792
Project Title:	**WIE17837 - P5 Drainage Catchment**	By:	Kevin Kelly	Date:	12.05.23
Calculations Title:	**Proposed Foul Flow Estimate**	Checked:	Paul McCluskey	Date:	12.05.23

		Dry Weather Flow Rate (per day)		Source	Number of	Factor	Profile (hours)	Peak Flow Rate (litres/second)
Residential						2.12	24	
New property =	*125 litres/person/day*							
Occupancy =	*2.5 persons*	312.5 litres per	unit	Thames Water Guidelines (2016)	0 2 bed units			0.0
	3.6 persons	450.0			0 3 bed units			0.0
	4.8 persons	600.0			0 4 bed units			0.0
	5.9 persons	737.5			0 5 bed units			0.0
Hotel		500.0 litres per	room	British Water (2013)	0 rooms	3	24	0.0
Student Accommodation		200.0 litres per	bed	Thames Water Guidelines (2016)	0 beds	3	24	0.0
Offices		750.0 litres per	$100m^2$	Jones (1992)	0 m^2	3	10	0.0
Retail		400.0 litres per	$100m^2$	Jones (1992)	0 m^2	3	12	0.0
Cinema		10.0 litres per	seat	Jones (1992)	0 seats*	3	8	0.0
Health Club/Sports Centre		50.0 litres per	customer	British Water (2013)	0 customers**	3	16	0.0
Day School		90.0 litres per	pupil	British Water (2013)	0 pupils	3	10	0.0
Boarding School		175.0 litres per	pupil	British Water (2013)	0 pupils	3	24	0.0
Hospital		625.0 litres per	bed	Jones (1992)	0 beds	3	24	0.0
Nursing Home		350.0 litres per	bed	British Water (2013)	0 beds	3	24	0.0
Restaurant		30.0 litres per	cover	British Water (2013)	0 covers	3	8	0.0
Pub/Club		15.0 litres per	customer	Butler and Davies (2004)	0 customers***	3	12	0.0
Warehouse		150.0 litres per	$100m^2$	Jones (1992)	0 m^2	3	12	0.0
Manufacturing		550.0 litres per	$100m^2$	Jones (1992)	0 m^2	3	12	0.0
Commercial		300.0 litres per	$100m^2$	Jones (1992)	2251 m^2	3	12	0.5
Data Centre		0.25 litres/s per	data hall		18 halls			4.5
Infiltration Percentage								0.0
TOTAL								**5.0**

* Foul flow rate needs to be calculated based on number of seats. An allowance of $4m^2$ has been made for each seat.

Floor area = 0 m^2 4 m^2 per person

** Foul flow rate needs to be calculated based on number of customers. An allowance of $4m^2$ has been made for each customer.

Floor area = 0 m^2 4 m^2 per person

*** Foul flow rate needs to be calculated based on number of customers. An allowance of $4m^2$ has been made for each customer.

Floor area = 0 m^2 4 m^2 per person

H. Borehole Logs & Infiltration Testing Results

GROUNDTECH CONSULTING

Borehole Log

Borehole No. **BH101** Sheet 1 of 1

Project Name: P5 SPRING PARK	Project No. 19285	Co-ords: -	Hole Type CP
Location: CORSHAM		Level:	Scale 1:50
Client: WATERMAN I&E		Dates: 23/04/2020 - 23/04/2020	Logged By BM

Well	Water Strikes	Samples and In Situ Testing			Depth (m)	Level (m)	Legend	Stratum Description
		Depth (m)	Type	Results				
		0.20	D					MADE GROUND: Grass over brown slightly gravelly clayey sand topsoil. Gravel is angular to subrounded fine to coarse of mixed lithologies including brick, concrete and limestone.
		0.20	ES		0.40			
		0.50	ES					
		0.80	D		0.70			MADE GROUND: Black slightly cobbly gravelly ashy sand. Gravel is angular to subrounded fine to coarse of mixed lithologies including limestone, clinker and brick.
		1.00	ES					
		1.20	D					Brown very sandy silty CLAY.
		1.20		N=18 (3,4/4,4,4,6)	1.40			Firm brown gravelly CLAY. Gravel is angular to subrounded fine to coarse of sandstone.
		2.00	D		1.90			Pale brown cobbly clayey GRAVEL of pale brown pale grey destructured sandstone bedrock.
		2.00		N=39 (4,5/7,10,7,15)				
		2.80	D		2.80			LIMESTONE.
		2.80		N=50 (25 for 40mm/50 for 10mm)				
					6.00			End of borehole at 6.00 m

Remarks

1. Hand dug pit to 1.20m bgl. 2. No groundwater encountered. 3. Dynamic sample to 3.00m bgl with rotary coring follow on. 4. Install to 3.00m bgl, 0.50m plain pipe and 2.50m slotted pipe.

GROUNDTECH CONSULTING

Borehole Log

Borehole No. **BH102** Sheet 1 of 1

Project Name: P5 SPRING PARK	Project No. 19285	Co-ords: -	Hole Type CP
Location: CORSHAM		Level:	Scale 1:50
Client: WATERMAN I&E		Dates: 22/04/2020 - 22/04/2020	Logged By BM

Well	Water Strikes	Samples and In Situ Testing			Depth (m)	Level (m)	Legend	Stratum Description
		Depth (m)	Type	Results				
		0.20	D		0.25			MADE GROUND: Grey brown very sandy subangular to subrounded fine to coarse gravel of mixed lithologies including slate and limestone.
		0.20	ES		0.25			
		0.40	D		0.55			MADE GROUND: Geomesh.
		0.50	ES					MADE GROUND: Black dark brown slightly cobbly ashy sand. Gravel is angular to subrounded fine to coarse of mixed lithologies including ash, clinker, slate and brick.
		1.20	D					
		1.20		N=50 (6,7/50 for 235mm)				Firm to stiff slightly sandy gravelly CLAY. Gravel is subangular to subrounded fine to coarse of limestone.
		1.50	ES					
		1.55 - 2.00	U					
		2.00	D					
		2.00		N=39 (4,4/5,10,10,14)				*Grey blue from 2.20m bgl.*
					2.70			LIMESTONE.
		3.00	D					
		3.00		N=50 (25 for 40mm/50 for 20mm)				
					6.00			End of borehole at 6.00 m

1 2 3 4 5 6 7 8 9 10

Remarks

1. Hand dug pit to 1.20m bgl. 2. No groundwater encountered. 3. Dynamic sample to 3.00m bgl with rotary coring follow on. 4. Install to 6.00m bgl, 0.50m plain pipe and 5.50m slotted pipe.

GROUNDTECH CONSULTING

Borehole Log

Borehole No. **BH103**

Sheet 1 of 1

Project Name: P5 SPRING PARK	Project No. 19285	Co-ords: -	Hole Type CP
Location: CORSHAM		Level:	Scale 1:50
Client: WATERMAN I&E		Dates: 21/04/2020 - 21/04/2020	Logged By BM

Well	Water Strikes	Samples and In Situ Testing			Depth (m)	Level (m)	Legend	Stratum Description
		Depth (m)	Type	Results				
					0.25			MADE GROUND: Grey sandy angular to subrounded gravel of mixed lithologies incldluing brick and slate.
					0.25			MADE GROUND: Geomesh.
		0.50	D		0.40			MADE GROUND: Soft brown orange slightly gravelly very sandy clay. Gravel is subangular to subrounded fine to coarse of mixed lithologies including brick and limestone.
		0.50	ES					
		1.00	ES					
		1.20		N=11 (1,1/2,2,3,4)				Soft brown orange very sandy CLAY.
		1.50	D					
		2.00	B					
		2.00		N=50 (5,4/50 for 180mm)	2.30			Soft to firm orange brown slightly gravelly slightly sandy CLAY. Gravel is subangular to subrounded fine to coarse of limestone.
		2.40	D					
		2.40	ES					
		2.80		N=50 (7,19/50 for 10mm)	2.80			Strong pale brown pale grey destructured LIMESTONE interbedded with gravelly sand.
					4.00			MUDSTONE interbedded with LIMESTONE and CLAY.
					4.50			LIMESTONE.
					5.50			End of borehole at 5.50 m

Remarks

1. Hand dug pit to 1.20m bgl. 2. No groundwater encountered. 3. Dynamic sample to 2.80m bgl with rotary coring follow on. 4. Install to 5.50m bgl, 0.50m plain pipe and 5.00m slotted pipe.

Borehole Log

GROUNDTECH CONSULTING

Borehole No. **BH105**

Sheet 1 of 1

Project Name: P5 SPRING PARK	Project No. 19285	Co-ords: -	Hole Type CP
Location: CORSHAM		Level:	Scale 1:50
Client: WATERMAN I&E		Dates: 20/04/2020 - 21/04/2020	Logged By BM

Well	Water Strikes	Samples and In Situ Testing			Depth (m)	Level (m)	Legend	Stratum Description
		Depth (m)	Type	Results				
		0.20	ES		0.30			MADE GROUND: Dark brown grey sandy angular to subrounded fine to coarse gravel of mixed lithologies including slate.
		0.50	ES		0.30			MADE GROUND: Geomesh.
		0.80	ES		0.60			MADE GROUND: Firm brown gravelly clay. Gravel is subangular to subrounded fine to coarse of mixed lithologies including brick, ash, quartzite and sandstone.
		1.20		N=50 (4,9/50 for 80mm)	0.85			Firm brown gravelly CLAY. Gravel is subangular to subrounded fine to coarse of limestone and quartzite.
					1.40			Pale brown very gravelly slightly sandy CLAY. Gravel is subangular to subrounded fine of limestone and shell fragments.
								Strong pale brown pale grey destructured LIMESTONE interbedded with gravelly sand.
					3.50			SANDSTONE.
					4.50			LIMESTONE.
					5.00			End of borehole at 5.00 m

Remarks

1. Hand dug pit to 1.20m bgl. 2. No groundwater encountered. 3. Dynamic sample to 1.40m bgl with rotary coring follow on. 4. Install to 5.00m bgl, 0.50m plain pipe and 4.50m slotted pipe.

P5 SPRING PARK, CORSHAM
19285
WATERMAN I&E

SOIL PERCOLATION TEST

GROUNDTECH CONSULTING

Sheet 1 of 2

Date of Test: 22/04/2020

POSITION: SA101
TEST 1

Weather: Clear

Engineer: *B Massey*
Checked: *R Wyatt*

Trial Pit Measurements

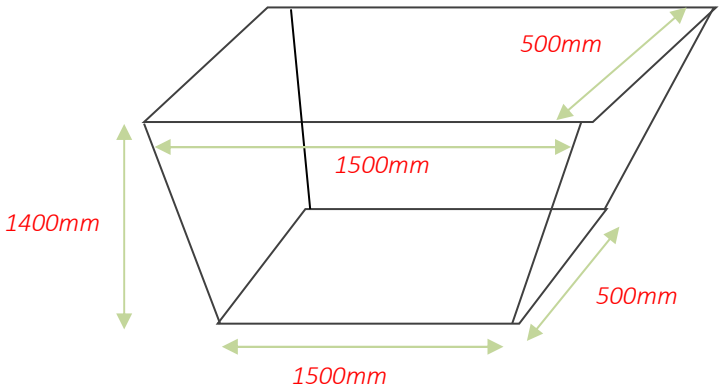

Pit Depth (mm):	1400
Pit Details:	Open with no stone filling
Groundwater Level:	NGW

Test Data

Time Elapsed (mins)	Depth to Water Level (mm)
0	420
1	430
2	436
3	440
4	442
5	445
10	468
15	484
23	507
33	535
46	568
57	590
67	600
92	655
120	691

P5 SPRING PARK, CORSHAM
19285
WATERMAN I&E

Sheet 2 of 2

SOIL PERCOLATION TEST

POSITION: SA101
TEST 1

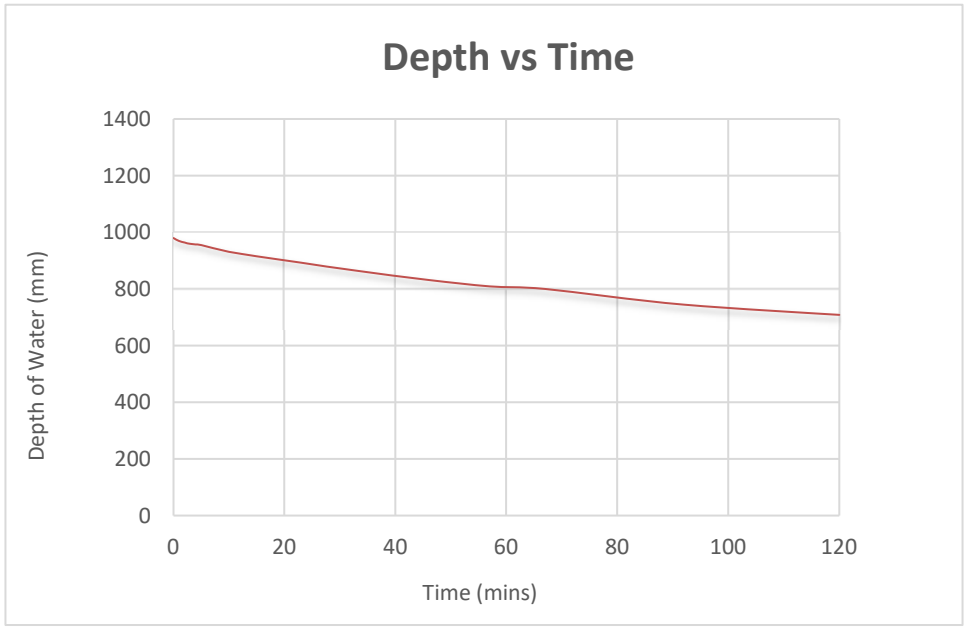

Volume of Pit (m^3)	1.05
Void Ratio of Infill	1
Volume of Infill (m^3)	N/A
Volume of Water in Pit (m^3)	0.735

Compliancy Check:

Water Level at 75% effective depth (mm)	735
Water Level at 25% effective depth (mm)	245

Test not BRE 365 compliant with BRE 365 - insufficient time to drain past 25% effective depth

Soil Infiltration Rate Calculation

Water Level 1	980
Water Level 2	709
Time to Drain from Level 1 to Level 2 (mins)	120
Volume of water discharged (m^3)	0.20325

Discharge Area (m^2)	1.834
Soil Infiltration Rate (m/min)	0.0009235
Soil Infiltration Rate (m/sec)	***1.54E-05***

P5 SPRING PARK, CORSHAM
19285
WATERMAN I&E

SOIL PERCOLATION TEST

GROUNDTECH CONSULTING

Sheet 1 of 2

Date of Test: 22/04/2020

POSITION: SA101
TEST 2

Weather: Clear

Engineer: *B Massey*
Checked: *R Wyatt*

Trial Pit Measurements

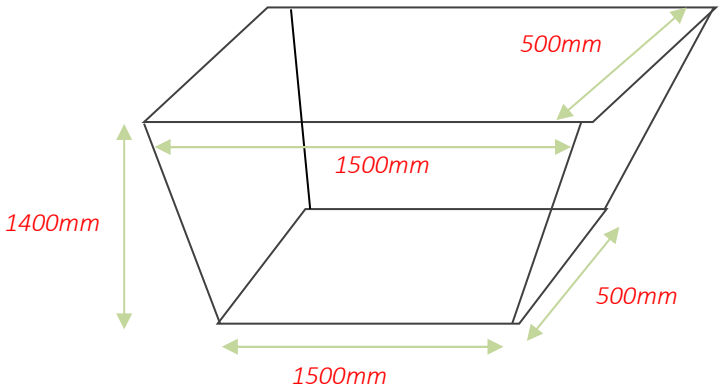

Test Data

Time Elapsed (mins)	Depth to Water Level (mm)
0	691
15	714
30	731
50	754
75	783
120	823

Pit Depth (mm):	1400
Pit Details:	Open with no stone filling
Groundwater Level:	NGW

P5 SPRING PARK, CORSHAM
19285
WATERMAN I&E

Sheet 2 of 2

SOIL PERCOLATION TEST

POSITION: SA101
TEST 2

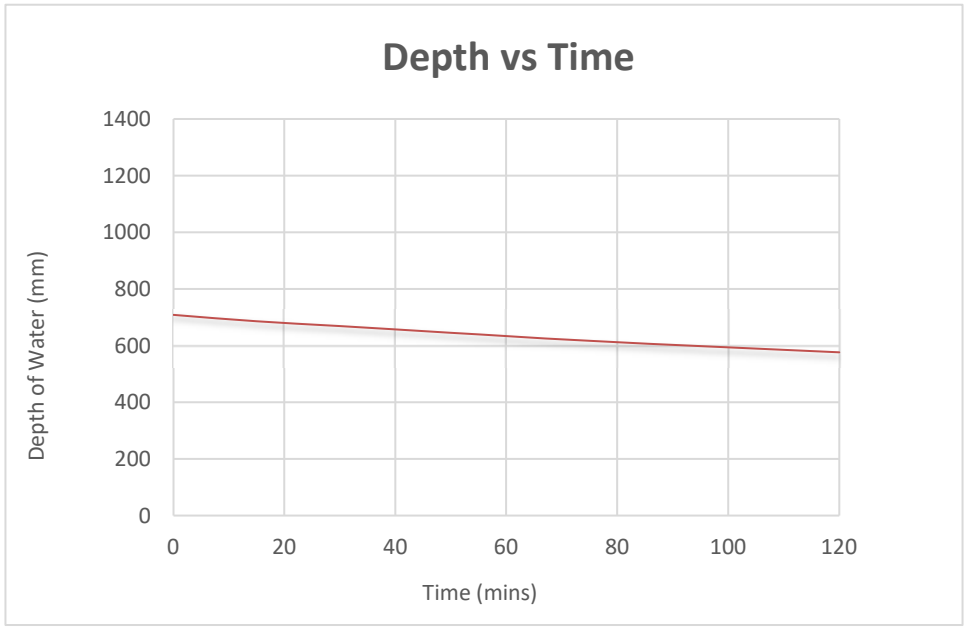

Volume of Pit (m^3)	1.05
Void Ratio of Infill	1
Volume of Infill (m^3)	N/A
Volume of Water in Pit (m^3)	0.53175

Compliancy Check:

Water Level at 75% effective depth (mm)	531.75
Water Level at 25% effective depth (mm)	177.25

Test not BRE 365 compliant with BRE 365 - insufficient time to drain past 25% effective depth

Soil Infiltration Rate Calculation

Water Level 1	709
Water Level 2	577
Time to Drain from Level 1 to Level 2 (mins)	120
Volume of water discharged (m^3)	0.099

Discharge Area (m^2)	1.278
Soil Infiltration Rate (m/min)	0.0006455
Soil Infiltration Rate (m/sec)	***1.08E-05***

P5 SPRING PARK, CORSHAM
19285
WATERMAN I&E

SOIL PERCOLATION TEST

GROUNDTECH CONSULTING

Sheet 1 of 2

Date of Test: 22/04/2020

POSITION: SA101
TEST 3

Weather: Clear

Engineer: *B Massey*
Checked: *R Wyatt*

Trial Pit Measurements

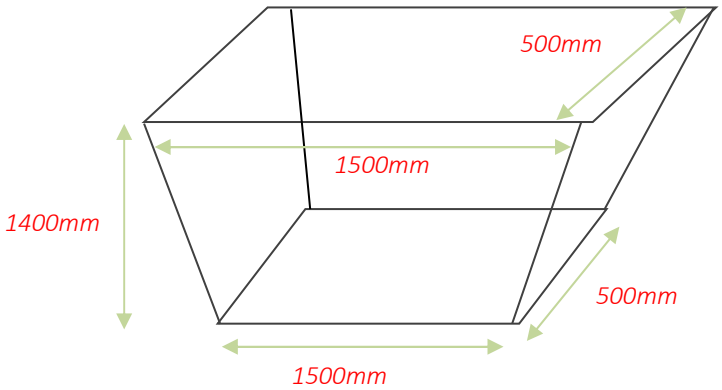

Test Data

Time Elapsed (mins)	Depth to Water Level (mm)
0	823
48	860
120	925

Pit Depth (mm):	1400
Pit Details:	Open with no stone filling
Groundwater Level:	NGW

P5 SPRING PARK, CORSHAM
19285
WATERMAN I&E

Sheet 2 of 2

SOIL PERCOLATION TEST

POSITION: SA101
TEST 3

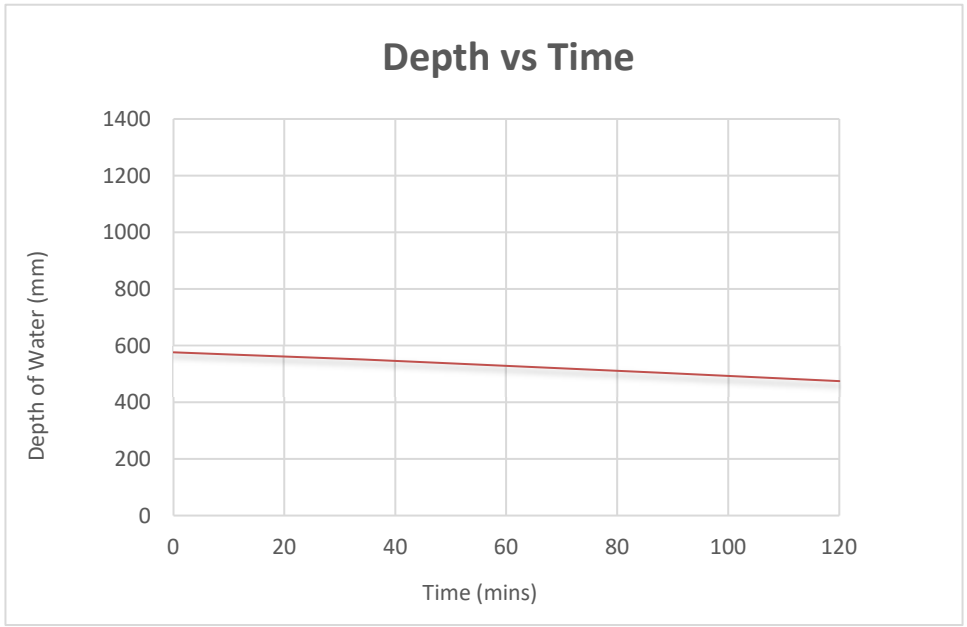

Volume of Pit (m^3)	1.05
Void Ratio of Infill	1
Volume of Infill (m^3)	N/A
Volume of Water in Pit (m^3)	0.43275

Compliancy Check:

Water Level at 75% effective depth (mm)	432.75
Water Level at 25% effective depth (mm)	144.25

Test not BRE 365 compliant with BRE 365 - insufficient time to drain past 25% effective depth

Soil Infiltration Rate Calculation

Water Level 1	577
Water Level 2	475
Time to Drain from Level 1 to Level 2 (mins)	120
Volume of water discharged (m^3)	0.0765

Discharge Area (m^2)	1.158
Soil Infiltration Rate (m/min)	0.0005505
Soil Infiltration Rate (m/sec)	***9.18E-06***

P5 SPRING PARK, CORSHAM
19285
WATERMAN I&E

SOIL PERCOLATION TEST

GROUNDTECH CONSULTING

Sheet 1 of 2

Date of Test: 23/04/2020

POSITION: SA102
TEST 1

Weather: Clear

Engineer: *B Massey*
Checked: *R Wyatt*

Trial Pit Measurements

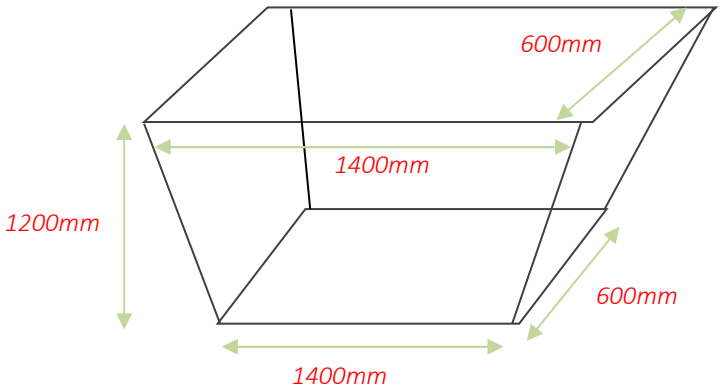

Pit Depth (mm):	1200
Pit Details:	Open with no stone filling
Groundwater Level:	NGW

Test Data

Time Elapsed (mins)	Depth to Water Level (mm)
0	495
1	500
2	504
3	506
4	507
5	509
10	518
15	526
23	536
34	545
44	556
59	570
97	590
111	598
120	605

P5 SPRING PARK, CORSHAM
19285
WATERMAN I&E

SOIL PERCOLATION TEST

Sheet 2 of 2

POSITION: SA102
TEST 1

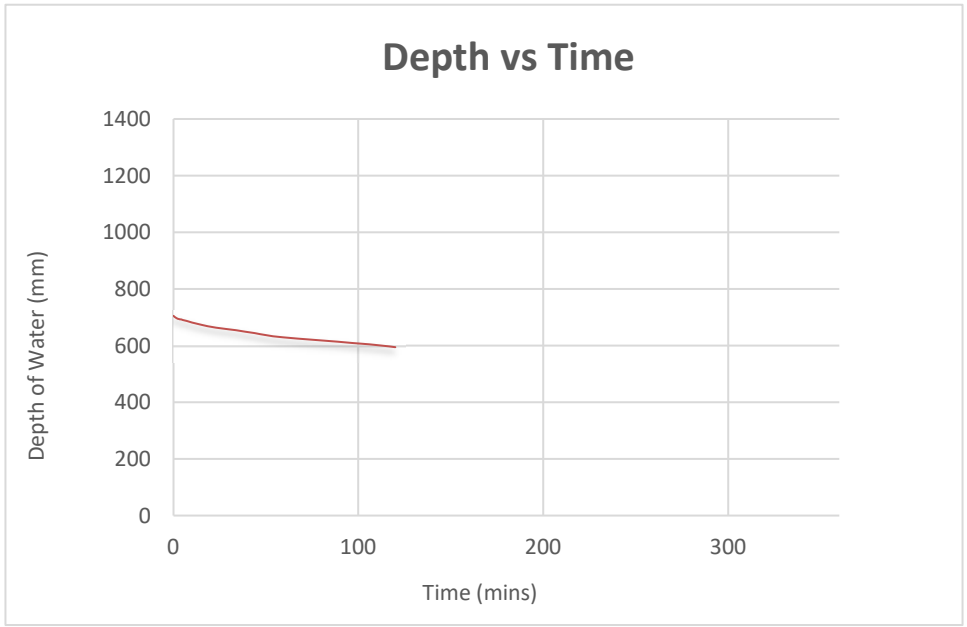

Volume of Pit (m^3)	1.008
Void Ratio of Infill	1
Volume of Infill (m^3)	N/A
Volume of Water in Pit (m^3)	0.5922

Compliancy Check:

Water Level at 75% effective depth (mm)	528.75
Water Level at 25% effective depth (mm)	176.25

Test not BRE 365 compliant with BRE 365 - insufficient time to drain past 25% effective depth

Soil Infiltration Rate Calculation

Water Level 1	705
Water Level 2	595
Time to Drain from Level 1 to Level 2 (mins)	120
Volume of water discharged (m^3)	0.0924

Discharge Area (m^2)	1.28
Soil Infiltration Rate (m/min)	0.0006016
Soil Infiltration Rate (m/sec)	***1.00E-05***

P5 SPRING PARK, CORSHAM
19285
WATERMAN I&E

SOIL PERCOLATION TEST

GROUNDTECH CONSULTING

Sheet 1 of 2

Date of Test: 23/04/2020

POSITION: SA102
TEST 2

Weather: Clear

Engineer: *B Massey*
Checked: *R Wyatt*

Trial Pit Measurements

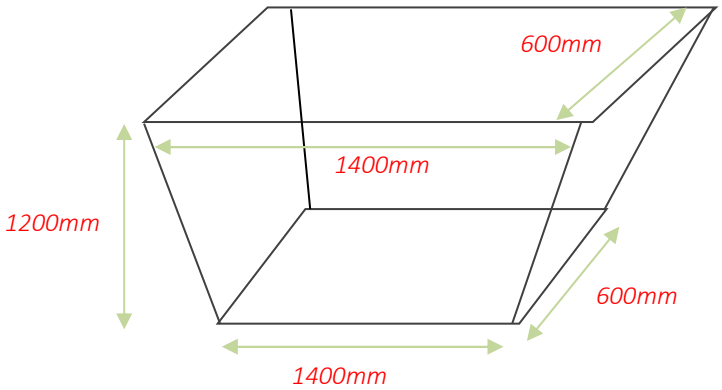

Test Data

Time Elapsed (mins)	Depth to Water Level (mm)
0	605
27	616
52	625
97	651
120	665

Pit Depth (mm):	1200
Pit Details:	Open with no stone filling
Groundwater Level:	NGW

P5 SPRING PARK, CORSHAM
19285
WATERMAN I&E

Sheet 2 of 2

SOIL PERCOLATION TEST

POSITION: SA102
TEST 2

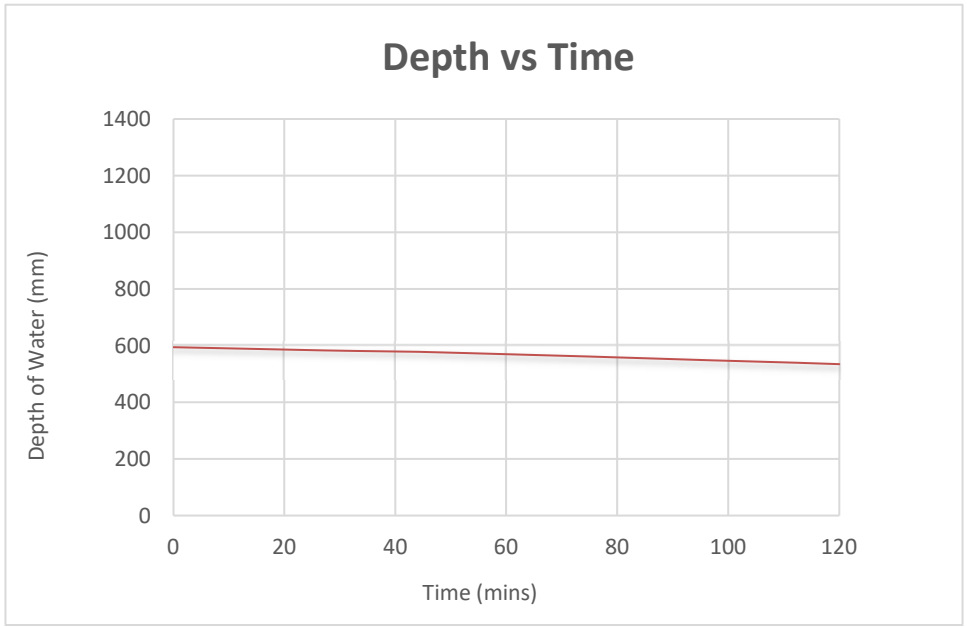

Volume of Pit (m^3)	1.008
Void Ratio of Infill	1
Volume of Infill (m^3)	N/A
Volume of Water in Pit (m^3)	0.4998

Compliancy Check:

Water Level at 75% effective depth (mm)	446.25
Water Level at 25% effective depth (mm)	148.75

Test not BRE 365 compliant with BRE 365 - insufficient time to drain past 25% effective depth

Soil Infiltration Rate Calculation

Water Level 1	595
Water Level 2	535
Time to Drain from Level 1 to Level 2 (mins)	120
Volume of water discharged (m^3)	0.0504

Discharge Area (m^2)	1.08
Soil Infiltration Rate (m/min)	0.0003889
Soil Infiltration Rate (m/sec)	***6.48E-06***

P5 SPRING PARK, CORSHAM
19285
WATERMAN I&E

SOIL PERCOLATION TEST

GROUNDTECH CONSULTING

Sheet 1 of 2

Date of Test: 23/04/2020

POSITION: SA102
TEST 3

Weather: Clear

Engineer: *B Massey*
Checked: *R Wyatt*

Trial Pit Measurements

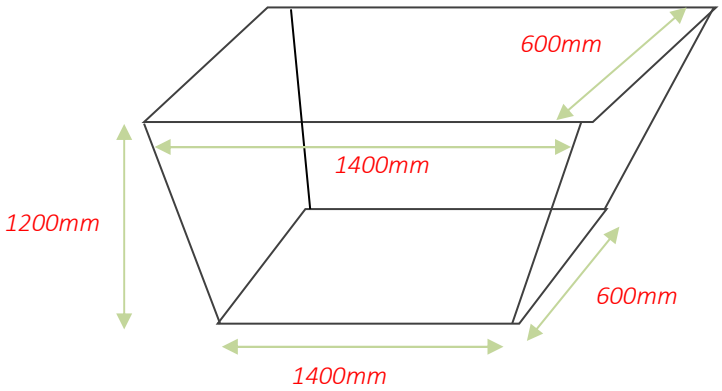

Test Data

Time Elapsed (mins)	Depth to Water Level (mm)
0	665
25	682
120	704

Pit Depth (mm):	1200
Pit Details:	Open with no stone filling
Groundwater Level:	NGW

P5 SPRING PARK, CORSHAM
19285
WATERMAN I&E

Sheet 2 of 2

SOIL PERCOLATION TEST

POSITION: SA102
TEST 3

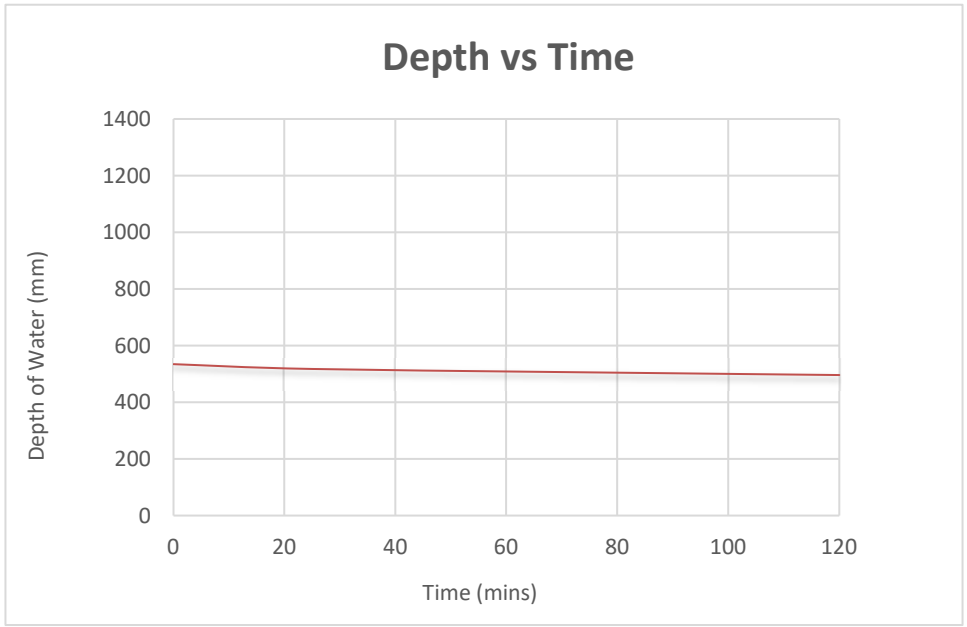

Volume of Pit (m^3)	1.008
Void Ratio of Infill	1
Volume of Infill (m^3)	N/A
Volume of Water in Pit (m^3)	0.4494

Compliancy Check:

Water Level at 75% effective depth (mm)	401.25
Water Level at 25% effective depth (mm)	133.75

Test not BRE 365 compliant with BRE 365 - insufficient time to drain past 25% effective depth

Soil Infiltration Rate Calculation

Water Level 1	535
Water Level 2	496
Time to Drain from Level 1 to Level 2 (mins)	120
Volume of water discharged (m^3)	0.03276

Discharge Area (m^2)	0.996
Soil Infiltration Rate (m/min)	0.0002741
Soil Infiltration Rate (m/sec)	***4.57E-06***

P5 SPRING PARK, CORSHAM
19285
WATERMAN I&E

SOIL PERCOLATION TEST

GROUNDTECH CONSULTING

Sheet 1 of 2

Date of Test: 22/04/2020

POSITION: SA103
TEST 1

Weather: Clear

Engineer: *B Massey*
Checked: *R Wyatt*

Trial Pit Measurements

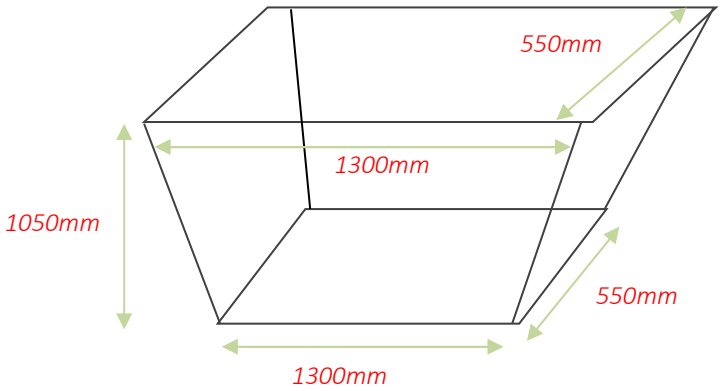

Pit Depth (mm):	1050
Pit Details:	Open with no stone filling
Groundwater Level:	NGW

Test Data

Time Elapsed (mins)	Depth to Water Level (mm)
0	474
1	480
2	488
3	495
4	500
5	511
10	543
14	580
32	670
60	755
75	790
90	820
110	854
120	870

P5 SPRING PARK, CORSHAM
19285
WATERMAN I&E

Sheet 2 of 2

SOIL PERCOLATION TEST

POSITION: SA103
TEST 1

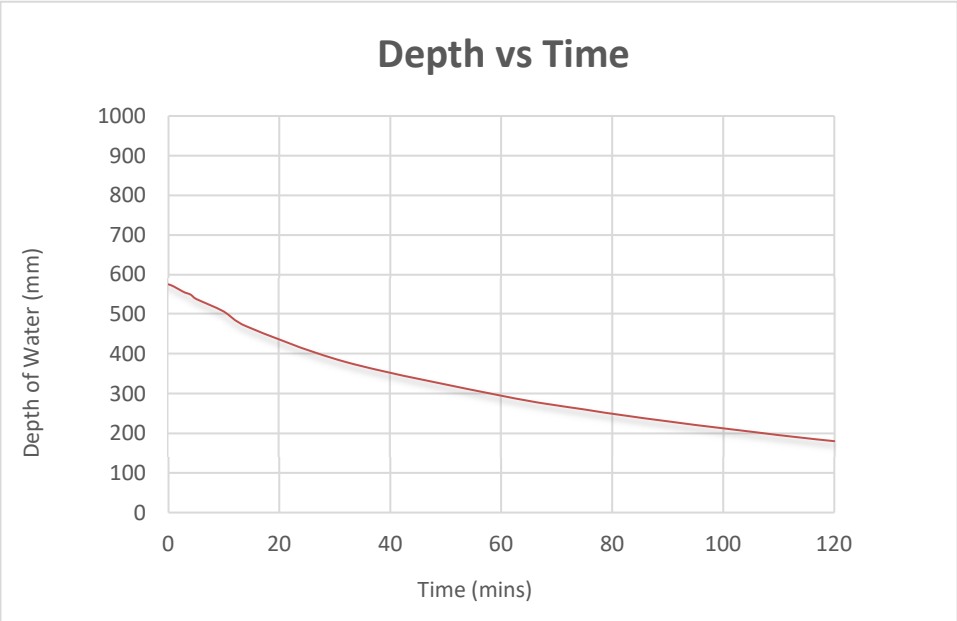

Volume of Pit (m^3)	0.75075
Void Ratio of Infill	1
Volume of Infill (m^3)	N/A
Volume of Water in Pit (m^3)	0.41184

Compliancy Check:

Water Level at 75% effective depth (mm)	432
Water Level at 25% effective depth (mm)	144

Test not BRE 365 compliant with BRE 365 - insufficient time to drain past 25% effective depth

Soil Infiltration Rate Calculation

Water Level 1	576
Water Level 2	180
Time to Drain from Level 1 to Level 2 (mins)	120
Volume of water discharged (m^3)	0.28314

Discharge Area (m^2)	2.1802
Soil Infiltration Rate (m/min)	0.0010822
Soil Infiltration Rate (m/sec)	***1.80E-05***

P5 SPRING PARK, CORSHAM
19285
WATERMAN I&E

SOIL PERCOLATION TEST

GROUNDTECH CONSULTING

Sheet 1 of 2

Date of Test: 22/04/2020

POSITION: SA103
TEST 2

Weather: Clear

Engineer: *B Massey*
Checked: *R Wyatt*

Trial Pit Measurements

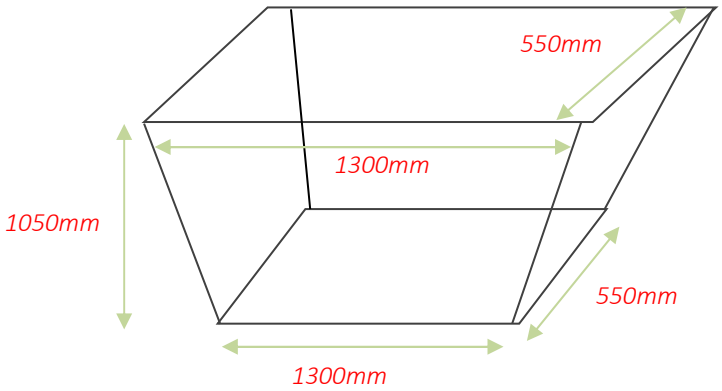

Test Data

Time Elapsed (mins)	Depth to Water Level (mm)
0	334
1	345
2	359
3	368
4	379
5	387
15	476
25	541
43	631
60	692
98	800
120	830

Pit Depth (mm):	1050
Pit Details:	Open with no stone filling
Groundwater Level:	NGW

P5 SPRING PARK, CORSHAM
19285
WATERMAN I&E

Sheet 2 of 2

SOIL PERCOLATION TEST

POSITION: SA103
TEST 2

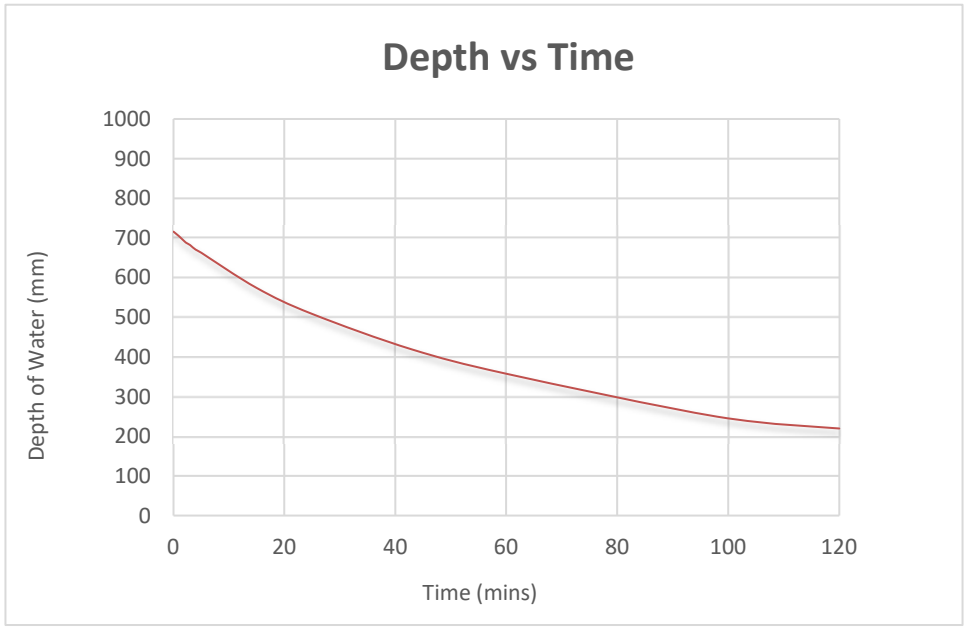

Volume of Pit (m^3)	0.75075
Void Ratio of Infill	1
Volume of Infill (m^3)	N/A
Volume of Water in Pit (m^3)	0.51194

Compliancy Check:

Water Level at 75% effective depth (mm)	537
Water Level at 25% effective depth (mm)	179

Test not BRE 365 compliant with BRE 365 - insufficient time to drain past 25% effective depth

Soil Infiltration Rate Calculation

Water Level 1	716
Water Level 2	220
Time to Drain from Level 1 to Level 2 (mins)	120
Volume of water discharged (m^3)	0.35464

Discharge Area (m^2)	2.5502
Soil Infiltration Rate (m/min)	0.0011589
Soil Infiltration Rate (m/sec)	***1.93E-05***

P5 SPRING PARK, CORSHAM
19285
WATERMAN I&E

SOIL PERCOLATION TEST

GROUNDTECH CONSULTING

Sheet 1 of 2

Date of Test: 22/04/2020

POSITION: SA103
TEST 3

Weather: Clear

Engineer: *B Massey*
Checked: *R Wyatt*

Trial Pit Measurements

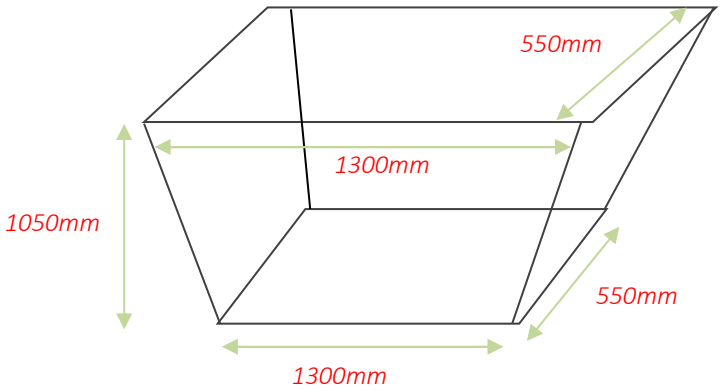

Test Data

Time Elapsed (mins)	Depth to Water Level (mm)
0	545
1	550
2	565
3	576
4	584
5	590
21	621
44	706
72	770
90	800
120	851

Pit Depth (mm):	1050
Pit Details:	Open with no stone filling
Groundwater Level:	NGW

P5 SPRING PARK, CORSHAM
19285
WATERMAN I&E

Sheet 2 of 2

SOIL PERCOLATION TEST

POSITION: SA103
TEST 3

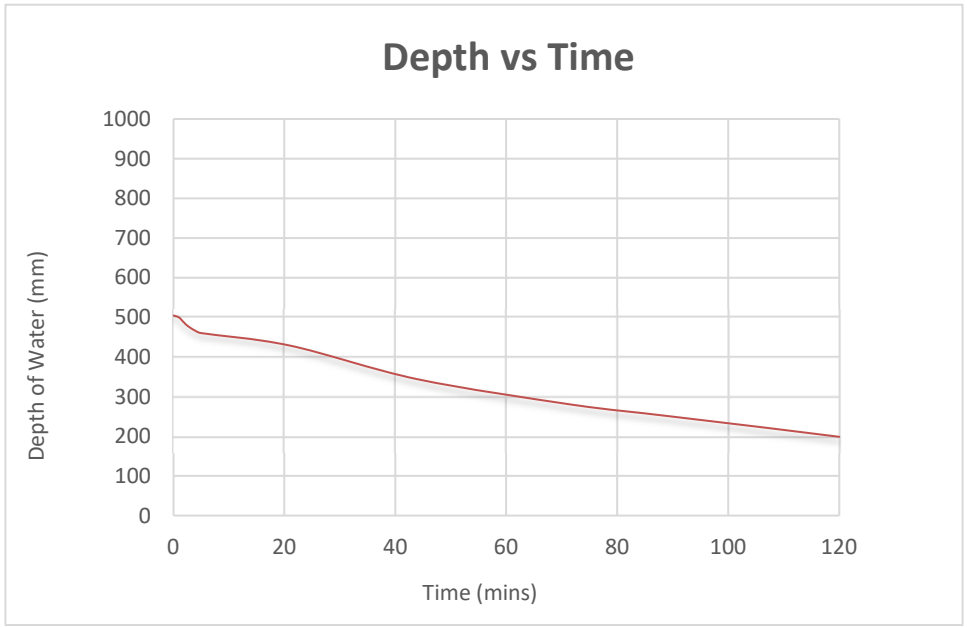

Volume of Pit (m^3)	0.75075
Void Ratio of Infill	1
Volume of Infill (m^3)	N/A
Volume of Water in Pit (m^3)	0.361075

Compliancy Check:

Water Level at 75% effective depth (mm)	378.75
Water Level at 25% effective depth (mm)	126.25

Test not BRE 365 compliant with BRE 365 - insufficient time to drain past 25% effective depth

Soil Infiltration Rate Calculation

Water Level 1	505
Water Level 2	199
Time to Drain from Level 1 to Level 2 (mins)	120
Volume of water discharged (m^3)	0.21879

Discharge Area (m^2)	1.8472
Soil Infiltration Rate (m/min)	0.000987
Soil Infiltration Rate (m/sec)	***1.65E-05***

SPRING PARK, CORSHAM
GRO-19285
WATERMAN I&E

SOIL PERCOLATION TEST

GROUNDTECH CONSULTING

Sheet 1 of 2

Date of Test: 20/10/2020

POSITION: SA104
TEST 1

Weather: Overcast, showers

Engineer: *B Massey*
Checked:

Trial Pit Measurements

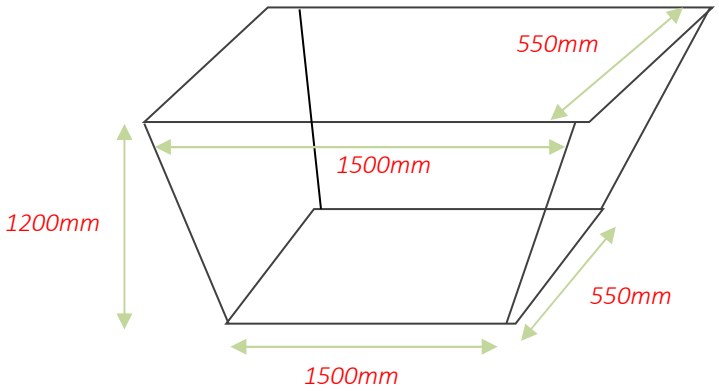

Pit Depth (mm):	1200
Pit Details:	Open with no stone filling
Groundwater Level:	NGW

Test Data

Time Elapsed (mins)	Depth to Water Level (m)
0	272
1	279
2	287
3	299
4	305
5	313
13	377
15	385
20	422
28	465
40	515
50	556
70	617
80	640
100	685
120	722

SPRING PARK, CORSHAM
GRO-19285
WATERMAN I&E

SOIL PERCOLATION TEST

Sheet 2 of 2

POSITION: SA104
TEST 1

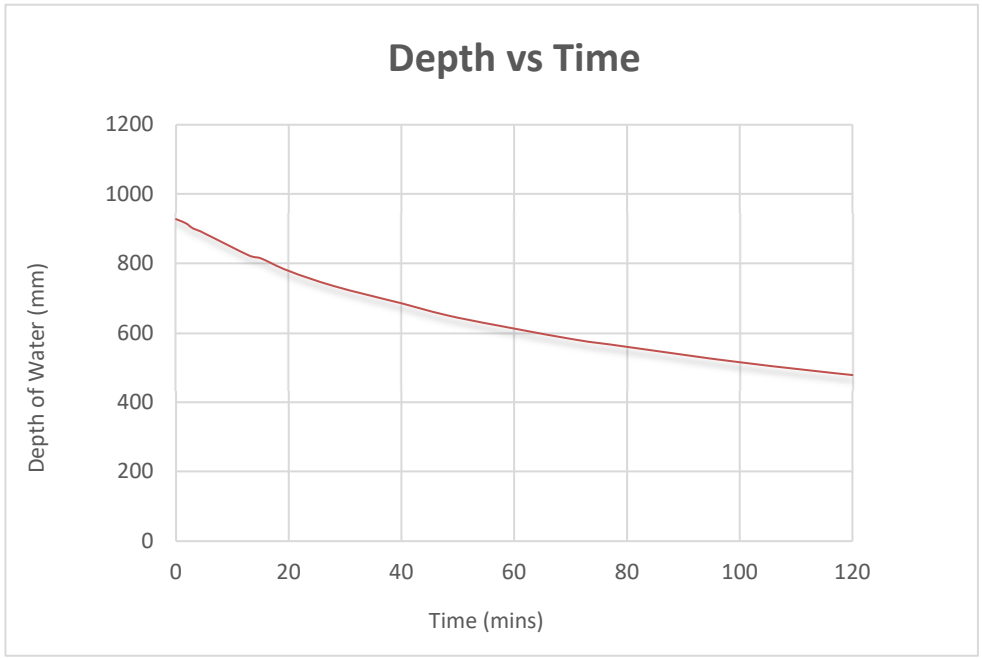

Volume of Pit (m^3)	0.99
Void Ratio of Infill	1
Volume of Infill (m^3)	N/A
Volume of Water in Pit (m^3)	0.7656

Compliancy Check:

Water Level at 75% effective depth (mm)	696
Water Level at 25% effective depth (mm)	232

Test not BRE 365 compliant with BRE 365 - insufficient time to drain past 25% effective depth

Soil Infiltration Rate Calculation

Water Level 1	798
Water Level 2	348
Time to Drain from Level 1 to Level 2 (mins)	120
Volume of water discharged (m^3)	0.37125

Discharge Area (m^2)	3.1743
Soil Infiltration Rate (m/min)	0.0009746
Soil Infiltration Rate (m/sec)	***1.62E-05***

SPRING PARK, CORSHAM
GRO-19285
WATERMAN I&E

SOIL PERCOLATION TEST

GROUNDTECH CONSULTING

Sheet 1 of 2

Date of Test: 20/10/2020

POSITION: SA104
TEST 2

Weather: Overcast, showers

Engineer: *B Massey*
Checked:

Trial Pit Measurements

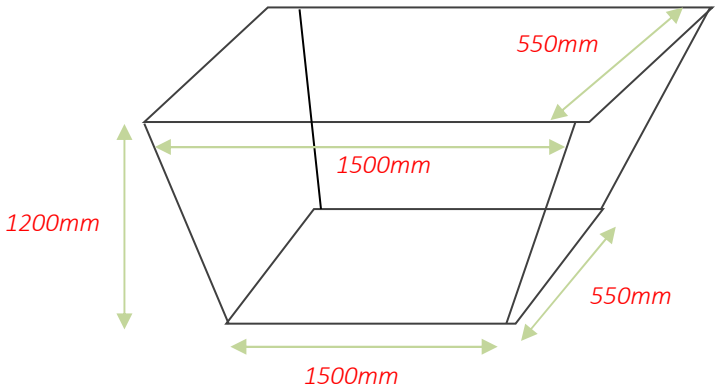

Test Data

Time Elapsed (mins)	Depth to Water Level (m)
0	286
1	289
2	293
5	310
11	340
18	374
35	446
55	510
65	546
75	571
90	606
100	626
120	658

Pit Depth (mm):	1200
Pit Details:	Open with no stone filling
Groundwater Level:	NGW

SPRING PARK, CORSHAM
GRO-19285
WATERMAN I&E

SOIL PERCOLATION TEST

GROUNDTECH CONSULTING

Sheet 2 of 2

POSITION: SA104
TEST 2

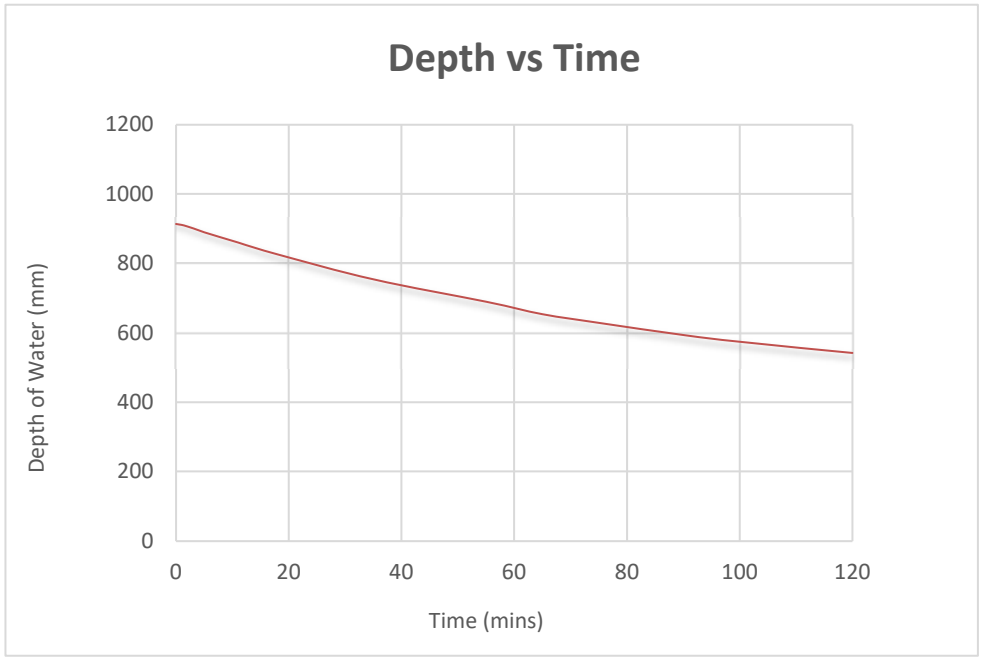

Volume of Pit (m^3)	0.99
Void Ratio of Infill	1
Volume of Infill (m^3)	N/A
Volume of Water in Pit (m^3)	0.75405

Compliancy Check:

Water Level at 75% effective depth (mm)	685.5
Water Level at 25% effective depth (mm)	228.5

Test not BRE 365 compliant with BRE 365 - insufficient time to drain past 25% effective depth

Soil Infiltration Rate Calculation

Water Level 1	784
Water Level 2	412
Time to Drain from Level 1 to Level 2 (mins)	120
Volume of water discharged (m^3)	0.3069

Discharge Area (m^2)	3.2768
Soil Infiltration Rate (m/min)	0.0007805
Soil Infiltration Rate (m/sec)	***1.30E-05***

SPRING PARK, CORSHAM
GRO-19285
WATERMAN I&E

SOIL PERCOLATION TEST

GROUNDTECH CONSULTING

Sheet 1 of 2

Date of Test: 20/10/2020

POSITION: SA104
TEST 3

Weather: Overcast, showers

Engineer: *B Massey*
Checked:

Trial Pit Measurements

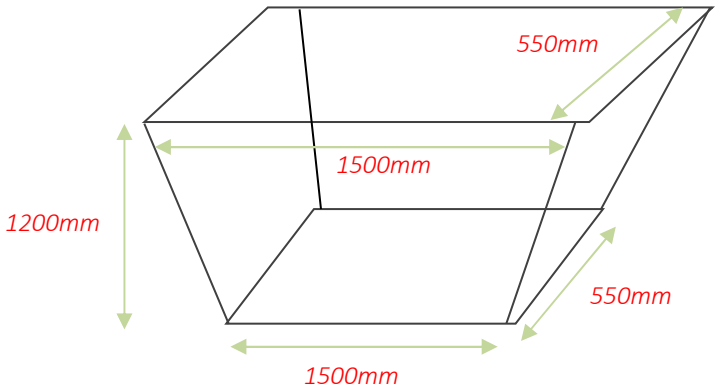

Test Data

Time Elapsed (mins)	Depth to Water Level (m)
0	245
3	254
5	263
10	288
15	315
30	371
35	385
55	459
70	497
90	554
105	585
120	618

Pit Depth (mm):	1200
Pit Details:	Open with no stone filling
Groundwater Level:	NGW

SPRING PARK, CORSHAM
GRO-19285
WATERMAN I&E

SOIL PERCOLATION TEST

Sheet 2 of 2

POSITION: SA104
TEST 3

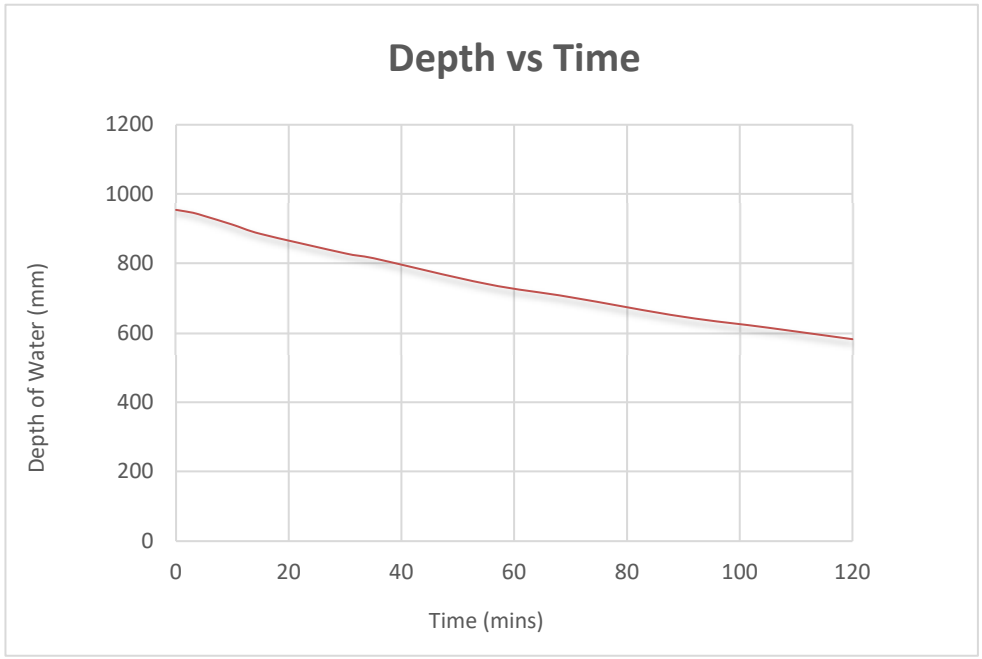

Volume of Pit (m^3)	0.99
Void Ratio of Infill	1
Volume of Infill (m^3)	N/A
Volume of Water in Pit (m^3)	0.787875

Compliancy Check:

Water Level at 75% effective depth (mm)	716.25
Water Level at 25% effective depth (mm)	238.75

Test not BRE 365 compliant with BRE 365 - insufficient time to drain past 25% effective depth

Soil Infiltration Rate Calculation

Water Level 1	825
Water Level 2	452
Time to Drain from Level 1 to Level 2 (mins)	120
Volume of water discharged (m^3)	0.307725

Discharge Area (m^2)	3.44285
Soil Infiltration Rate (m/min)	0.0007448
Soil Infiltration Rate (m/sec)	***1.24E-05***

SPRING PARK, CORSHAM
GRO-19285
WATERMAN I&E

SOIL PERCOLATION TEST

GROUNDTECH CONSULTING

Sheet 1 of 2

Date of Test: 20/10/2020

POSITION: SA105
TEST 1

Weather: Overcast, showers

Engineer: B Massey
Checked:

Trial Pit Measurements

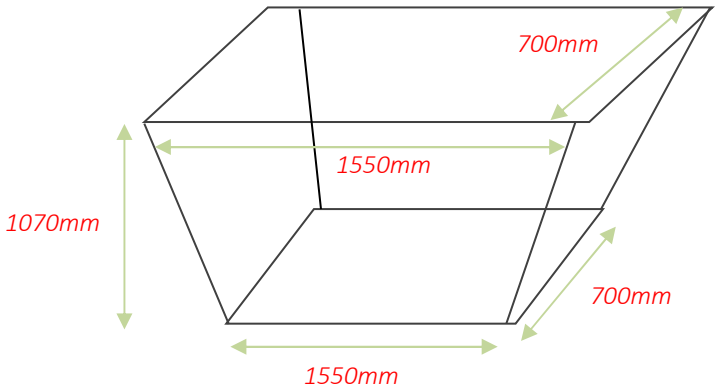

Pit Depth (mm):	1070
Pit Details:	Open with no stone filling
Groundwater Level:	NGW

Test Data

Time Elapsed (mins)	Depth to Water Level (m)
0	258
1	264
2	278
3	291
4	307
5	321
10	380
15	435
20	483
30	570
40	630
52	682
62	725
81	779
100	814
120	849

SPRING PARK, CORSHAM
GRO-19285
WATERMAN I&E

SOIL PERCOLATION TEST

Sheet 2 of 2

POSITION: SA105
TEST 1

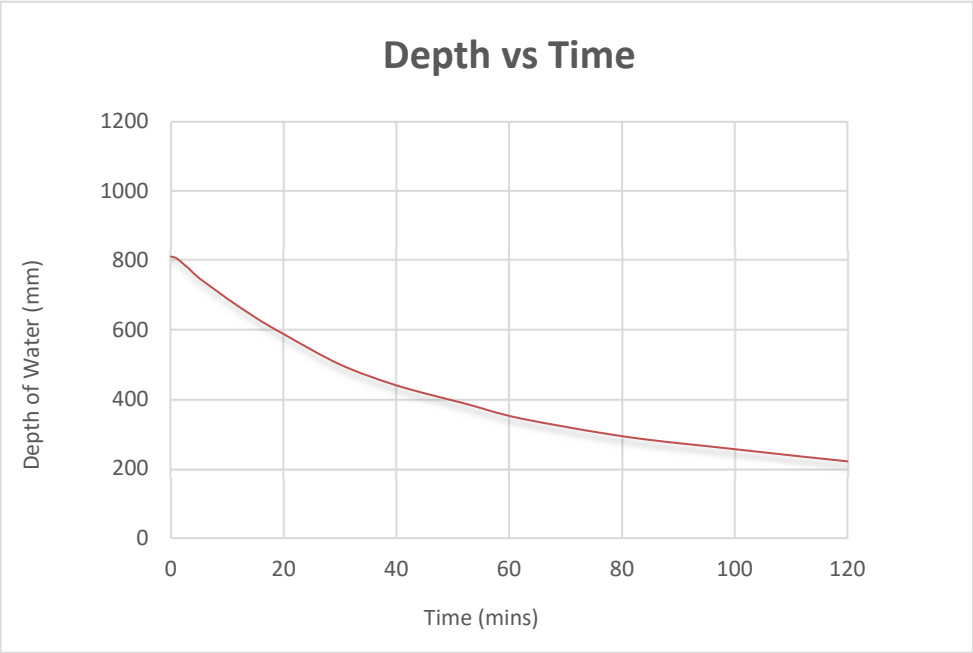

Volume of Pit (m^3)	1.13925
Void Ratio of Infill	1
Volume of Infill (m^3)	N/A
Volume of Water in Pit (m^3)	0.88102

Compliancy Check:

Water Level at 75% effective depth (mm)	609
Water Level at 25% effective depth (mm)	203

Compliant with BRE 365

Soil Infiltration Rate Calculation

Water Level 1	813
Water Level 2	221
Time to Drain from Level 1 to Level 2 (mins)	120
Volume of water discharged (m^3)	0.64232

Discharge Area (m^2)	3.4115
Soil Infiltration Rate (m/min)	0.001569
Soil Infiltration Rate (m/sec)	***2.62E-05***

SPRING PARK, CORSHAM
GRO-19285
WATERMAN I&E

SOIL PERCOLATION TEST

GROUNDTECH CONSULTING

Sheet 1 of 2

Date of Test: 20/10/2020

POSITION: SA105
TEST 2

Weather: Overcast, showers

Engineer: *B Massey*
Checked:

Trial Pit Measurements

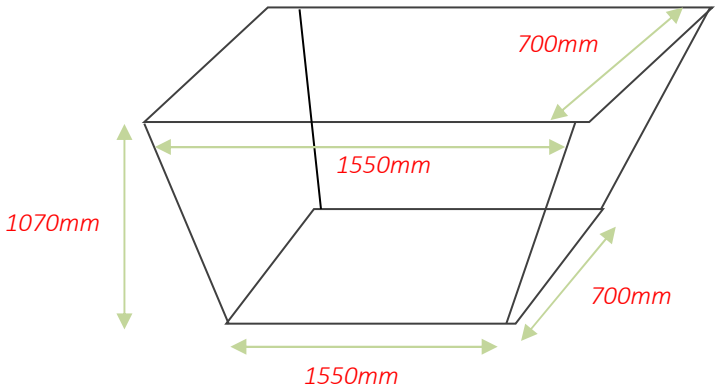

Test Data

Time Elapsed (mins)	Depth to Water Level (m)
0	286
1	289
2	293
5	310
11	340
18	374
35	446
55	510
65	546
75	571
90	606
100	626
120	658

Pit Depth (mm):	1070
Pit Details:	Open with no stone filling
Groundwater Level:	NGW

SPRING PARK, CORSHAM
GRO-19285
WATERMAN I&E

SOIL PERCOLATION TEST

Sheet 2 of 2

POSITION: SA105
TEST 2

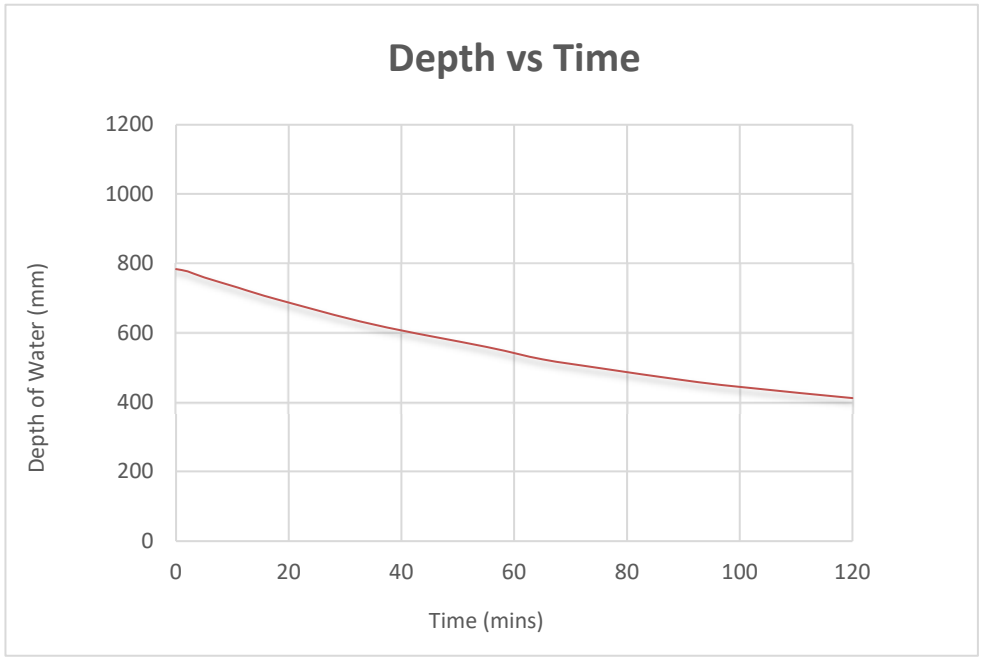

Volume of Pit (m^3)	1.13925
Void Ratio of Infill	1
Volume of Infill (m^3)	N/A
Volume of Water in Pit (m^3)	0.85064

Compliancy Check:

Water Level at 75% effective depth (mm)	588
Water Level at 25% effective depth (mm)	196

Test not BRE 365 compliant with BRE 365 - insufficient time to drain past 25% effective depth

Soil Infiltration Rate Calculation

Water Level 1	784
Water Level 2	412
Time to Drain from Level 1 to Level 2 (mins)	120
Volume of water discharged (m^3)	0.40362

Discharge Area (m^2)	3.776
Soil Infiltration Rate (m/min)	0.0008908
Soil Infiltration Rate (m/sec)	***1.48E-05***

SPRING PARK, CORSHAM
GRO-19285
WATERMAN I&E

SOIL PERCOLATION TEST

GROUNDTECH CONSULTING

Sheet 1 of 2

Date of Test: 20/10/2020

POSITION: SA105
TEST 3

Weather: Overcast, showers

Engineer: *B Massey*
Checked:

Trial Pit Measurements

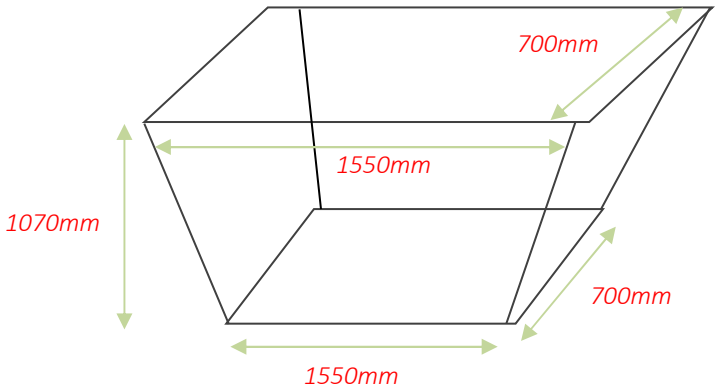

Test Data

Time Elapsed (mins)	Depth to Water Level (m)
0	245
3	254
5	263
10	288
15	315
30	371
35	385
55	459
70	497
90	554
105	585
120	618
0	

Pit Depth (mm):	1070
Pit Details:	Open with no stone filling
Groundwater Level:	NGW

SPRING PARK, CORSHAM
GRO-19285
WATERMAN I&E

SOIL PERCOLATION TEST

Sheet 2 of 2

POSITION: SA105
TEST 3

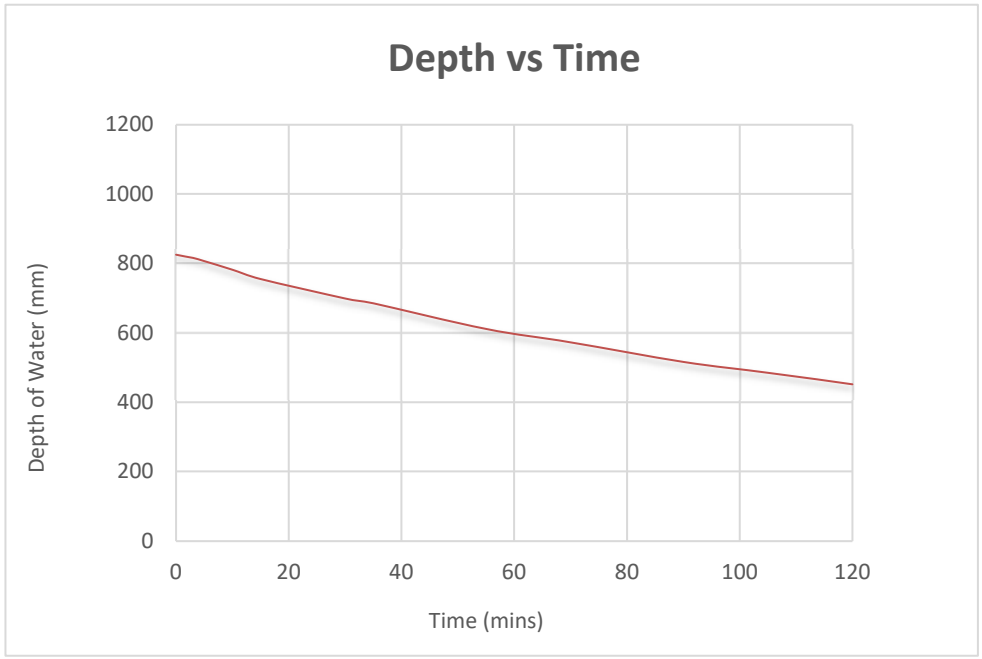

Volume of Pit (m^3)	1.13925
Void Ratio of Infill	1
Volume of Infill (m^3)	N/A
Volume of Water in Pit (m^3)	0.895125

Compliancy Check:

Water Level at 75% effective depth (mm)	618.75
Water Level at 25% effective depth (mm)	206.25

Test not BRE 365 compliant with BRE 365 - insufficient time to drain past 25% effective depth

Soil Infiltration Rate Calculation

Water Level 1	825
Water Level 2	452
Time to Drain from Level 1 to Level 2 (mins)	120
Volume of water discharged (m^3)	0.404705

Discharge Area (m^2)	3.95825
Soil Infiltration Rate (m/min)	0.000852
Soil Infiltration Rate (m/sec)	***1.42E-05***

SPRING PARK, CORSHAM
GRO-19285
WATERMAN I&E

SOIL PERCOLATION TEST

GROUNDTECH CONSULTING

Sheet 1 of 2

Date of Test: 21/10/2020

POSITION: SA106
TEST 1

Weather: Heavy rain

Engineer: *B Massey*
Checked:

Trial Pit Measurements

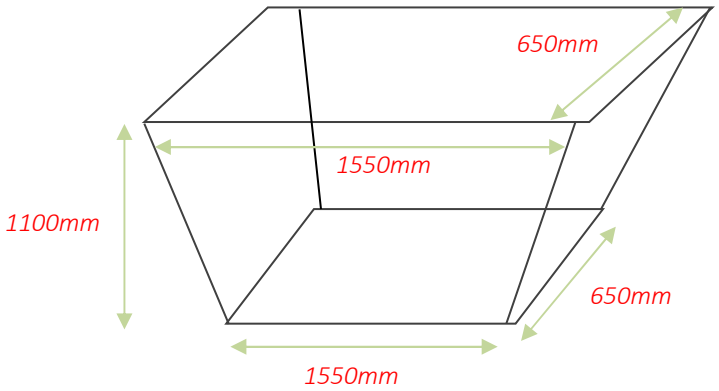

Pit Depth (mm):	1100
Pit Details:	Open with no stone filling
Groundwater Level:	NGW

Test Data

Time Elapsed (mins)	Depth to Water Level (m)
0	253
1	258
2	265
3	272
4	281
5	286
10	310
30	406
35	431
40	451
52	494
60	523
80	579
100	628
120	685

SPRING PARK, CORSHAM
GRO-19285
WATERMAN I&E

SOIL PERCOLATION TEST

Sheet 2 of 2

POSITION: SA106
TEST 1

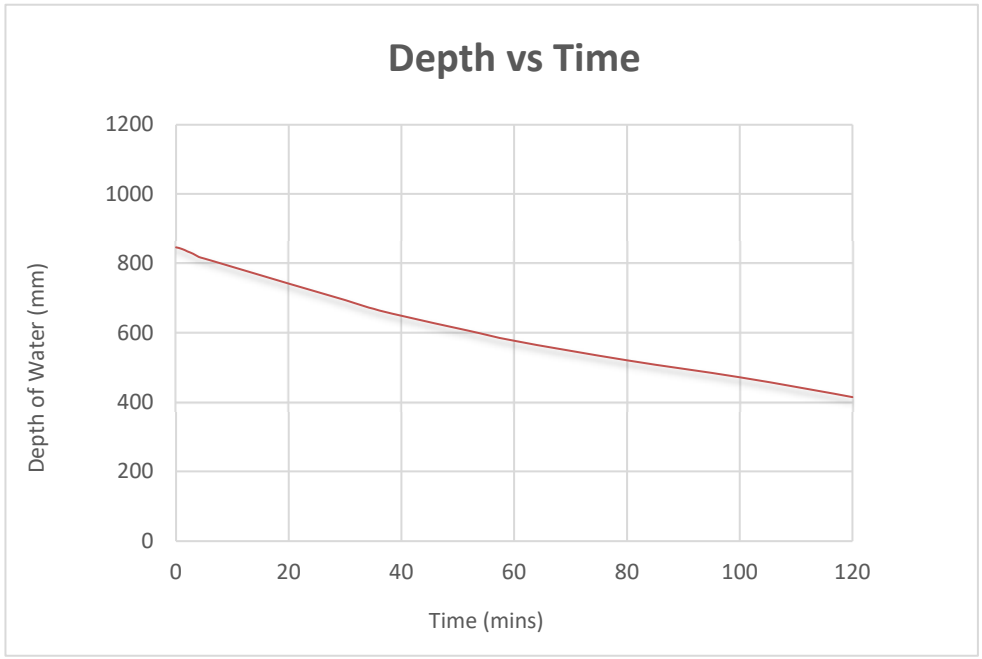

Volume of Pit (m^3)	1.10825
Void Ratio of Infill	1
Volume of Infill (m^3)	N/A
Volume of Water in Pit (m^3)	0.8533525

Compliancy Check:

Water Level at 75% effective depth (mm)	635.25
Water Level at 25% effective depth (mm)	211.75

Test not BRE 365 compliant with BRE 365 - insufficient time to drain past 25% effective depth

Soil Infiltration Rate Calculation

Water Level 1	847
Water Level 2	415
Time to Drain from Level 1 to Level 2 (mins)	120
Volume of water discharged (m^3)	0.43524

Discharge Area (m^2)	3.7839
Soil Infiltration Rate (m/min)	0.0009585
Soil Infiltration Rate (m/sec)	***1.60E-05***

SPRING PARK, CORSHAM
GRO-19285
WATERMAN I&E

SOIL PERCOLATION TEST

GROUNDTECH CONSULTING

Sheet 1 of 2

Date of Test: 21/10/2020

POSITION: SA106
TEST 2

Weather: Heavy rain

Engineer: *B Massey*
Checked:

Trial Pit Measurements

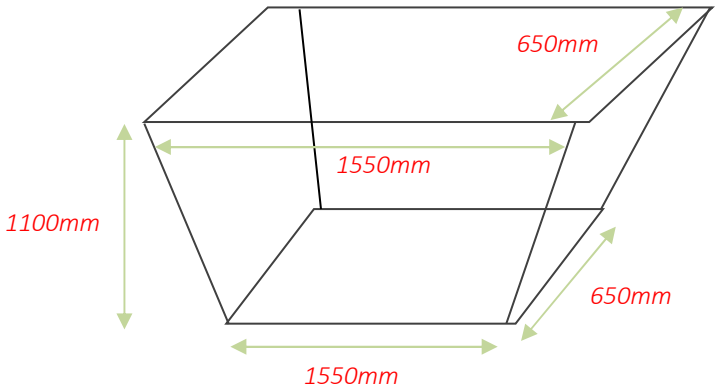

Pit Depth (mm):	1100
Pit Details:	Open with no stone filling
Groundwater Level:	NGW

Test Data

Time Elapsed (mins)	Depth to Water Level (m)
0	290
2	296
3	303
4	309
5	313
14	354
18	372
30	421
40	456
50	485
80	566
110	631
120	648
0	
0	

SPRING PARK, CORSHAM
GRO-19285
WATERMAN I&E

SOIL PERCOLATION TEST

Sheet 2 of 2

POSITION: SA106
TEST 2

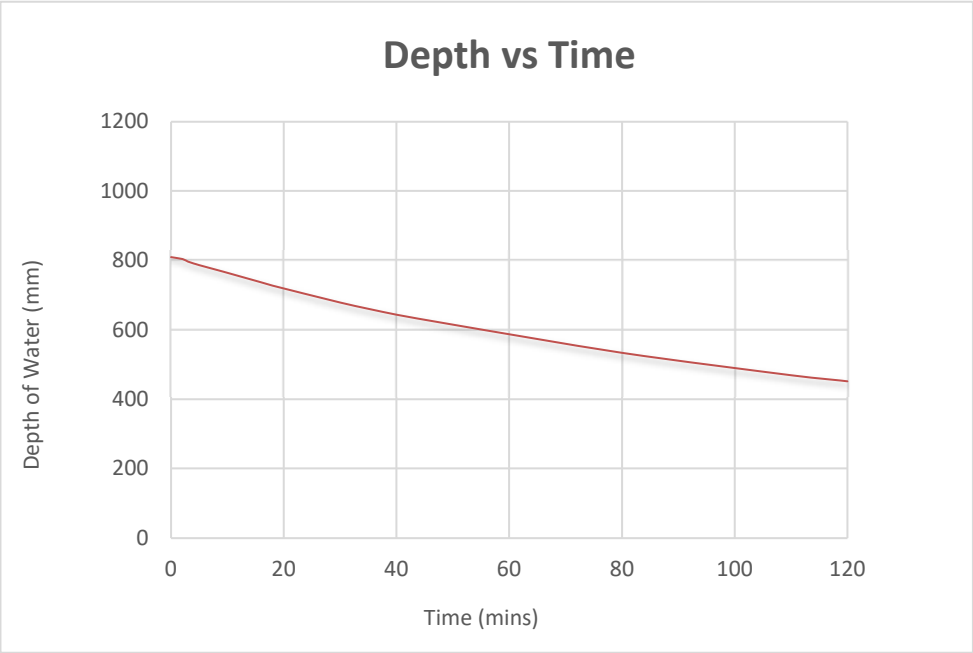

Volume of Pit (m^3)	1.10825
Void Ratio of Infill	1
Volume of Infill (m^3)	N/A
Volume of Water in Pit (m^3)	0.816075

Compliancy Check:

Water Level at 75% effective depth (mm)	607.5
Water Level at 25% effective depth (mm)	202.5

Test not BRE 365 compliant with BRE 365 - insufficient time to drain past 25% effective depth

Soil Infiltration Rate Calculation

Water Level 1	810
Water Level 2	452
Time to Drain from Level 1 to Level 2 (mins)	120
Volume of water discharged (m^3)	0.360685

Discharge Area (m^2)	3.7839
Soil Infiltration Rate (m/min)	0.0007943
Soil Infiltration Rate (m/sec)	***1.32E-05***

SPRING PARK, CORSHAM
GRO-19285
WATERMAN I&E

SOIL PERCOLATION TEST

GROUNDTECH CONSULTING

Sheet 1 of 2

Date of Test: 21/10/2020

POSITION: SA106
TEST 3

Weather: Heavy rain

Engineer: *B Massey*
Checked:

Trial Pit Measurements

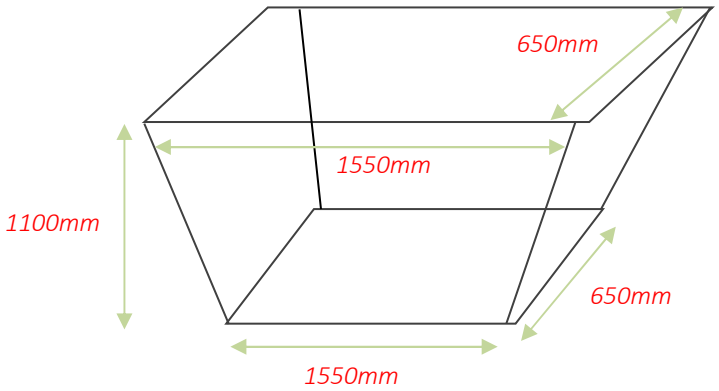

Pit Depth (mm):	1100
Pit Details:	Open with no stone filling
Groundwater Level:	NGW

Test Data

Time Elapsed (mins)	Depth to Water Level (m)
0	281
1	284
2	289
3	293
4	297
5	302
10	325
15	345
20	363
25	386
37	428
50	466
68	517
88	570
105	610
	640

SPRING PARK, CORSHAM
GRO-19285
WATERMAN I&E

SOIL PERCOLATION TEST

Sheet 2 of 2

POSITION: SA106
TEST 3

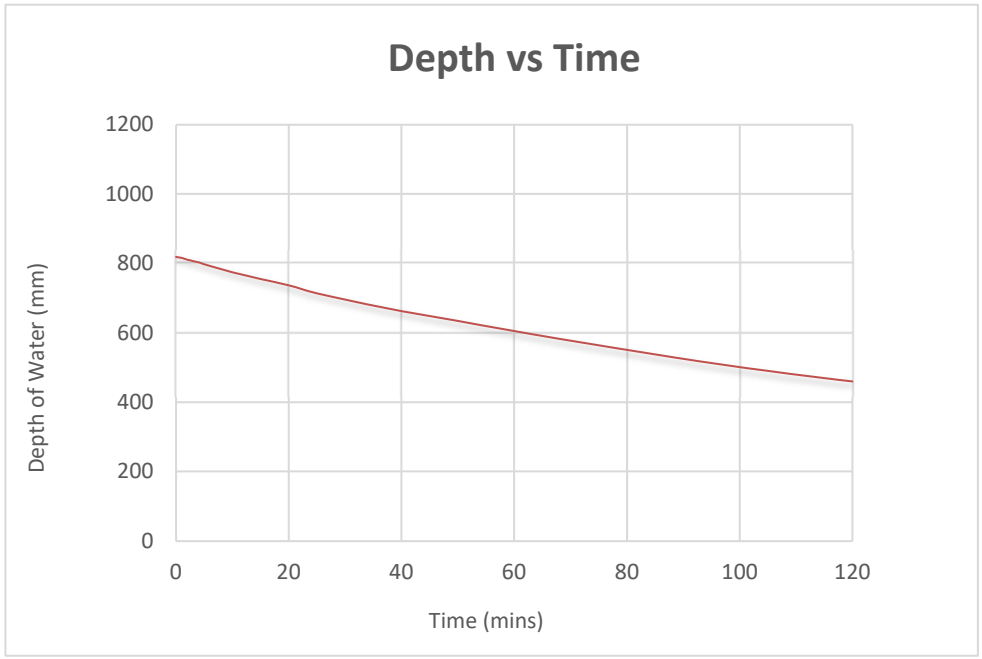

Volume of Pit (m^3)	1.10825
Void Ratio of Infill	1
Volume of Infill (m^3)	N/A
Volume of Water in Pit (m^3)	0.8251425

Compliancy Check:

Water Level at 75% effective depth (mm)	614.25
Water Level at 25% effective depth (mm)	204.75

Test not BRE 365 compliant with BRE 365 - insufficient time to drain past 25% effective depth

Soil Infiltration Rate Calculation

Water Level 1	819
Water Level 2	460
Time to Drain from Level 1 to Level 2 (mins)	120
Volume of water discharged (m^3)	0.3616925

Discharge Area (m^2)	3.8213
Soil Infiltration Rate (m/min)	0.0007888
Soil Infiltration Rate (m/sec)	***1.31E-05***

SPRING PARK, CORSHAM
GRO-19285
WATERMAN I&E

SOIL PERCOLATION TEST

GROUNDTECH CONSULTING

Sheet 1 of 2

Date of Test: 21/10/2020

POSITION: TP111
TEST 1

Weather: Heavy rain

Engineer: *B Massey*
Checked:

Trial Pit Measurements

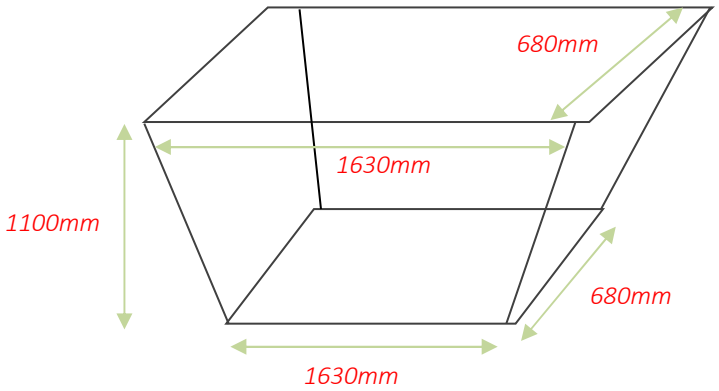

Pit Depth (mm):	1100
Pit Details:	Open with no stone filling
Groundwater Level:	NGW

Test Data

Time Elapsed (mins)	Depth to Water Level (m)
0	257
1	265
2	276
3	281
4	290
5	299
12	350
20	406
40	516
51	563
60	602
80	671
100	711
	745

SPRING PARK, CORSHAM
GRO-19285
WATERMAN I&E

SOIL PERCOLATION TEST

Sheet 2 of 2

POSITION: TP111
TEST 1

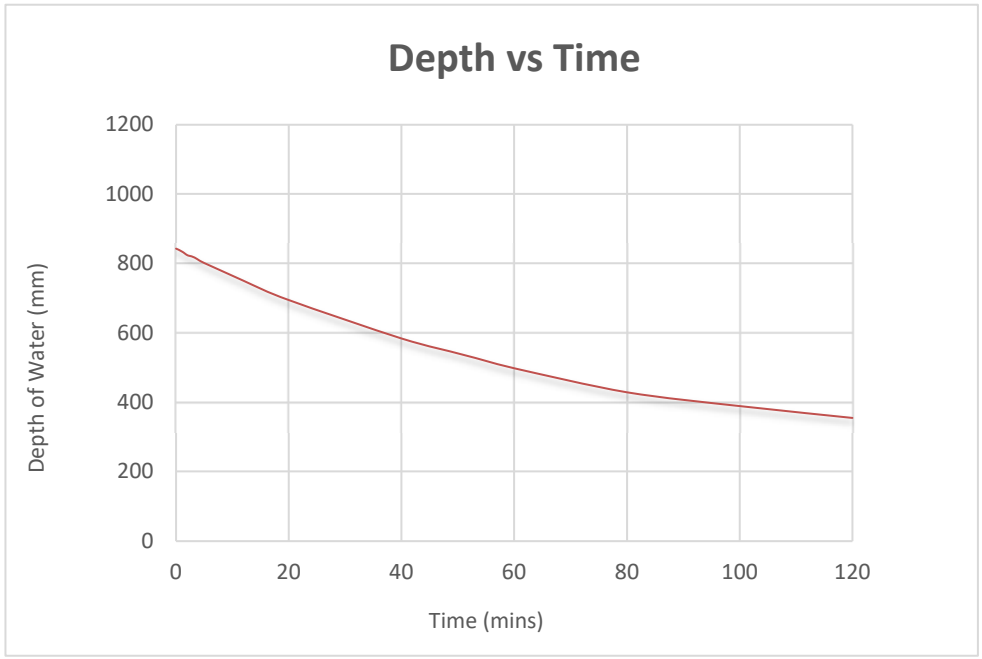

Volume of Pit (m^3)	1.21924
Void Ratio of Infill	1
Volume of Infill (m^3)	N/A
Volume of Water in Pit (m^3)	0.9343812

Compliancy Check:

Water Level at 75% effective depth (mm)	632.25
Water Level at 25% effective depth (mm)	210.75

Test not BRE 365 compliant with BRE 365 - insufficient time to drain past 25% effective depth

Soil Infiltration Rate Calculation

Water Level 1	843
Water Level 2	355
Time to Drain from Level 1 to Level 2 (mins)	120
Volume of water discharged (m^3)	0.5408992

Discharge Area (m^2)	3.87578
Soil Infiltration Rate (m/min)	0.001163
Soil Infiltration Rate (m/sec)	***1.94E-05***

SPRING PARK, CORSHAM
GRO-19285
WATERMAN I&E

SOIL PERCOLATION TEST

GROUNDTECH CONSULTING

Sheet 1 of 2

Date of Test: 21/10/2020

POSITION: TP111
TEST 2

Weather: Heavy rain

Engineer: *B Massey*
Checked:

Trial Pit Measurements

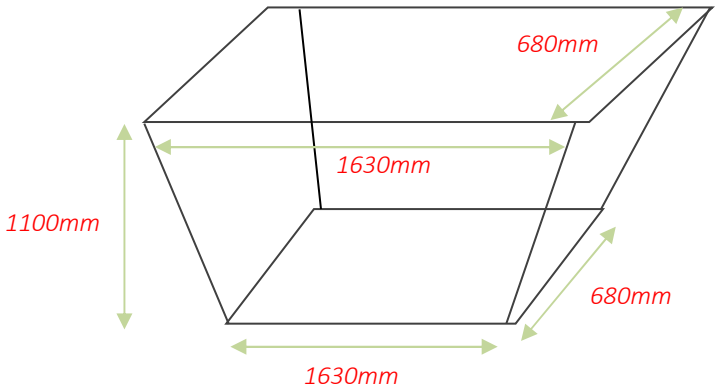

Pit Depth (mm):	1100
Pit Details:	Open with no stone filling
Groundwater Level:	NGW

Test Data

Time Elapsed (mins)	Depth to Water Level (m)
0	276
1	282
2	290
3	298
4	304
5	307
10	341
21	400
31	451
61	568
90	658
100	679
120	718

SPRING PARK, CORSHAM
GRO-19285
WATERMAN I&E

SOIL PERCOLATION TEST

Sheet 2 of 2

POSITION: TP111
TEST 2

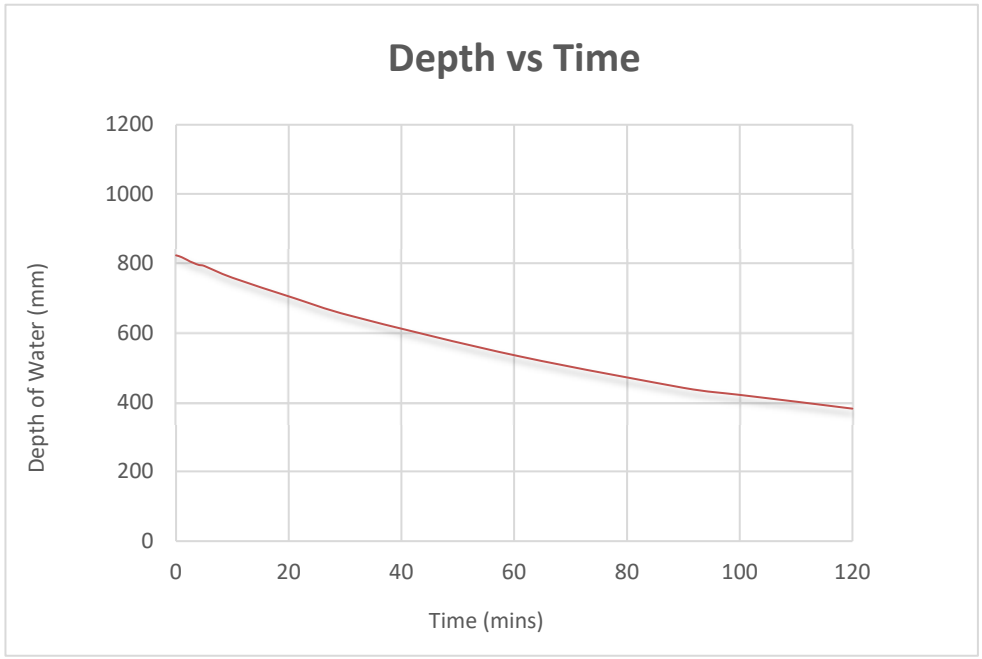

Volume of Pit (m^3)	1.21924
Void Ratio of Infill	1
Volume of Infill (m^3)	N/A
Volume of Water in Pit (m^3)	0.9133216

Compliancy Check:

Water Level at 75% effective depth (mm)	618
Water Level at 25% effective depth (mm)	206

Test not BRE 365 compliant with BRE 365 - insufficient time to drain past 25% effective depth

Soil Infiltration Rate Calculation

Water Level 1	824
Water Level 2	382
Time to Drain from Level 1 to Level 2 (mins)	120
Volume of water discharged (m^3)	0.4899128

Discharge Area (m^2)	3.89426
Soil Infiltration Rate (m/min)	0.0010484
Soil Infiltration Rate (m/sec)	***1.75E-05***

SPRING PARK, CORSHAM
GRO-19285
WATERMAN I&E

SOIL PERCOLATION TEST

Sheet 1 of 2

Date of Test: 21/10/2020

POSITION: TP111
TEST 3

Weather: Heavy rain

Engineer: *B Massey*
Checked:

Trial Pit Measurements

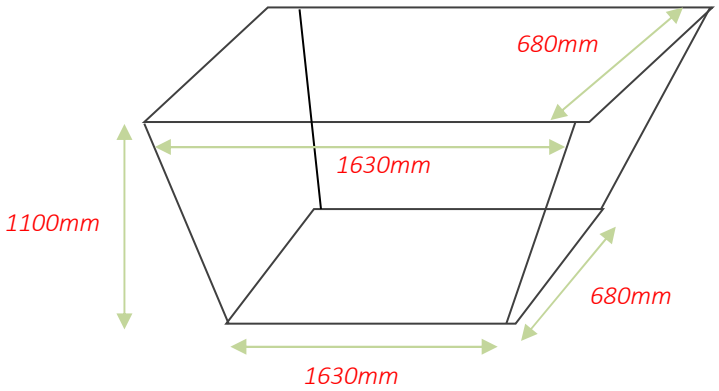

Pit Depth (mm):	1100
Pit Details:	Open with no stone filling
Groundwater Level:	NGW

Test Data

Time Elapsed (mins)	Depth to Water Level (m)
0	280
1	284
3	295
4	302
5	306
10	332
15	356
27	412
40	468
58	535
78	600
95	646
110	685
	707

SPRING PARK, CORSHAM
GRO-19285
WATERMAN I&E

SOIL PERCOLATION TEST

Sheet 2 of 2

POSITION: TP111
TEST 3

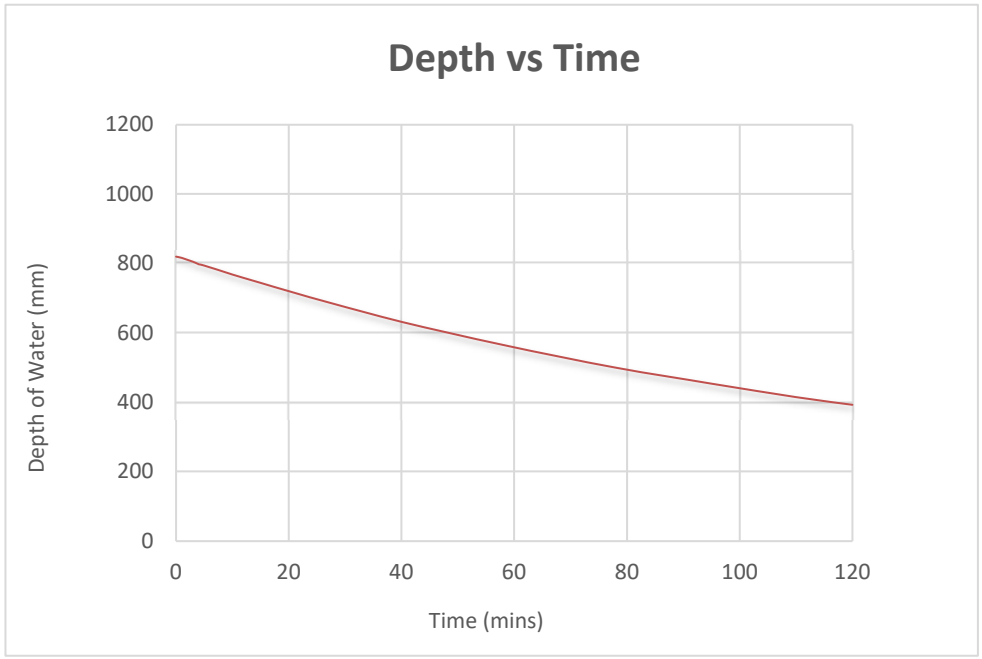

Volume of Pit (m^3)	1.21924
Void Ratio of Infill	1
Volume of Infill (m^3)	N/A
Volume of Water in Pit (m^3)	0.908888

Compliancy Check:

Water Level at 75% effective depth (mm)	615
Water Level at 25% effective depth (mm)	205

Test not BRE 365 compliant with BRE 365 - insufficient time to drain past 25% effective depth

Soil Infiltration Rate Calculation

Water Level 1	820
Water Level 2	393
Time to Drain from Level 1 to Level 2 (mins)	120
Volume of water discharged (m^3)	0.4732868

Discharge Area (m^2)	3.91043
Soil Infiltration Rate (m/min)	0.0010086
Soil Infiltration Rate (m/sec)	***1.68E-05***

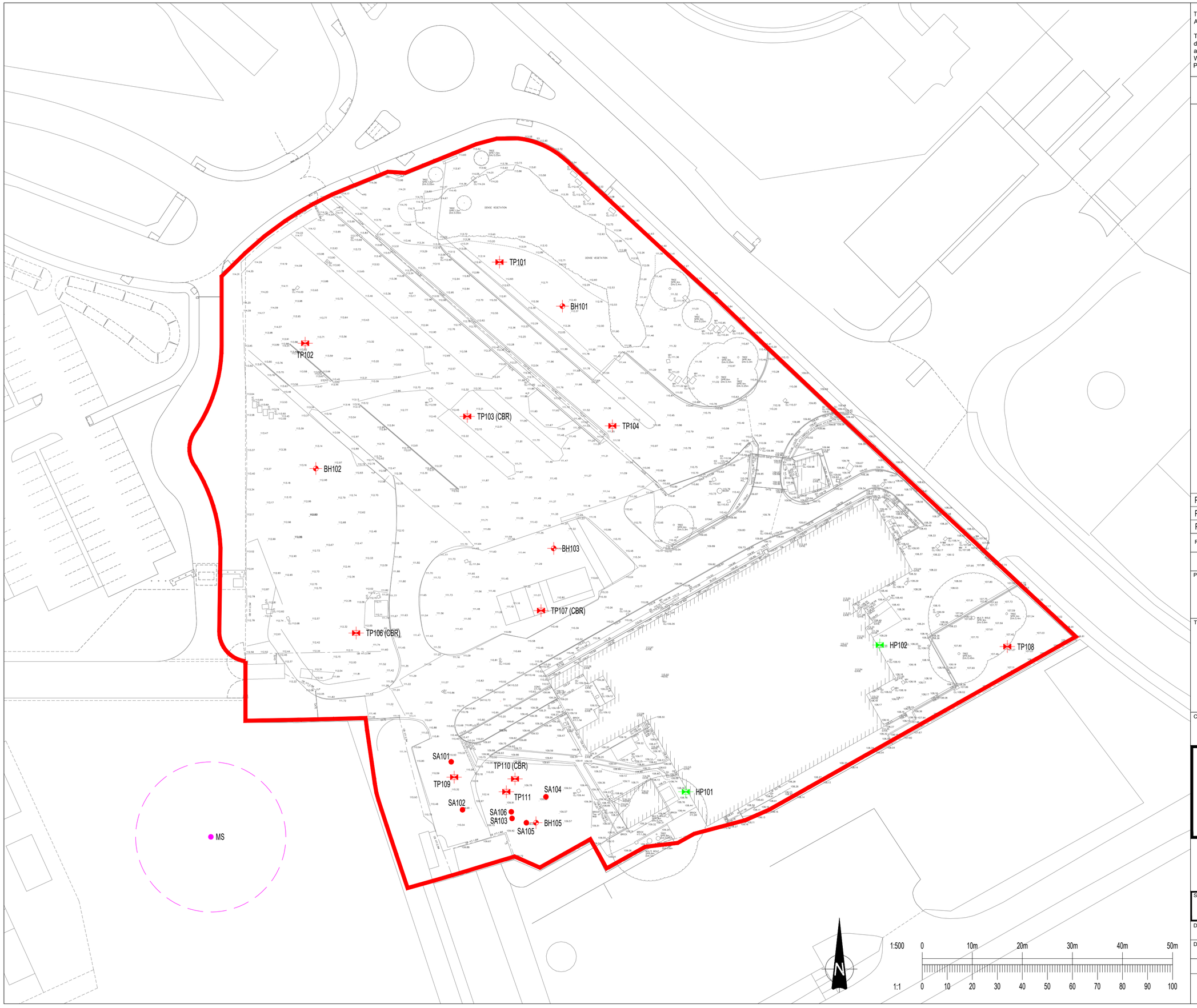

This drawing should not be scaled. Dimensions to be verified on site.
Any discrepancies should be referred to the Engineer prior to work being put in hand.

This drawing is the property of Waterman Infrastructure & Environment Limited, and the drawing is issued on the condition that it is not copied reproduced, retained or disclosed to any unauthorised person, either wholly or in part without the consent in writing of Waterman Infrastructure & Environment Limited
Pickfords Wharf, Clink Street, London SE1 9DG t 020 7928 7888 f 03333 444 501

GENERAL NOTES

KEY:

- SITE BOUNDARY
- BOREHOLE
- TRIAL PIT
- HAND PIT
- SOAKAWAY
- MINESHAFT LOCATION

Rev	Date	Description	By
P03	23.02.21	ADDITIONAL LOCATIONS ADDED	MC
P02	12.06.20	SURVEYED LOCATIONS	DC
P01	15.05.20	PRELIMINARY ISSUE	MC

Amendments

Project

SPRING PARK

Title

FINAL GROUND INVESTIGATION LOCATIONS EXISTING SITE LAYOUT

Client

ARK ESTATES SPRING PARK LTD

Waterman

Merchants House Wapping Road Bristol BS1 4RW
t 0117 937 8200
mail@watermangroup.com www.watermangroup.com

Status

PRELIMINARY

Designed By	Checked By	Waterman Ref
MA	MA	WIE16316-110
Drawn By	**Date**	**Scales @ A2**
DC	JUNE 2020	1:500

Project - Originator - Volume - Level - Type - Role - Number

16316-110-WIE-ZZ-XX-DR-V-80-001

Revision

P03

I. Wiltshire County Council Strategic Flood Risk Assessment Mapping

Properties at Risk
North Wiltshire - Detail

The information supplied in this plan is for the purposes of identification only. The precise route of pipework may not exactly match that shown. Wessex Water does not accept liability for inaccuracies. In carrying out any works, you accept liability for the cost of any repairs to be undertaken by Wessex Water as a consequence of any actions or those of your contractors. You are advised to commence excavations using hand tools only and not to use mechanical digging equipment until pipework has been precisely located.

If you are considering any form of building works and pipework is shown within the boundary of the property owned by you or to be purchased (or very close by) you should ask a surveyor to plot its exact position on the ground prior to purchase.
Building over or near Wessex Water's apparatus is not normally permitted.

Reproduced from the Ordnance Survey Map with the permission of the Controller of Her Majesty's Stationery Office. Crown copyright reserved, Licence No. 100019539
©The Automobile Association.

Wessex Water
a YTL company

Produced July 2007

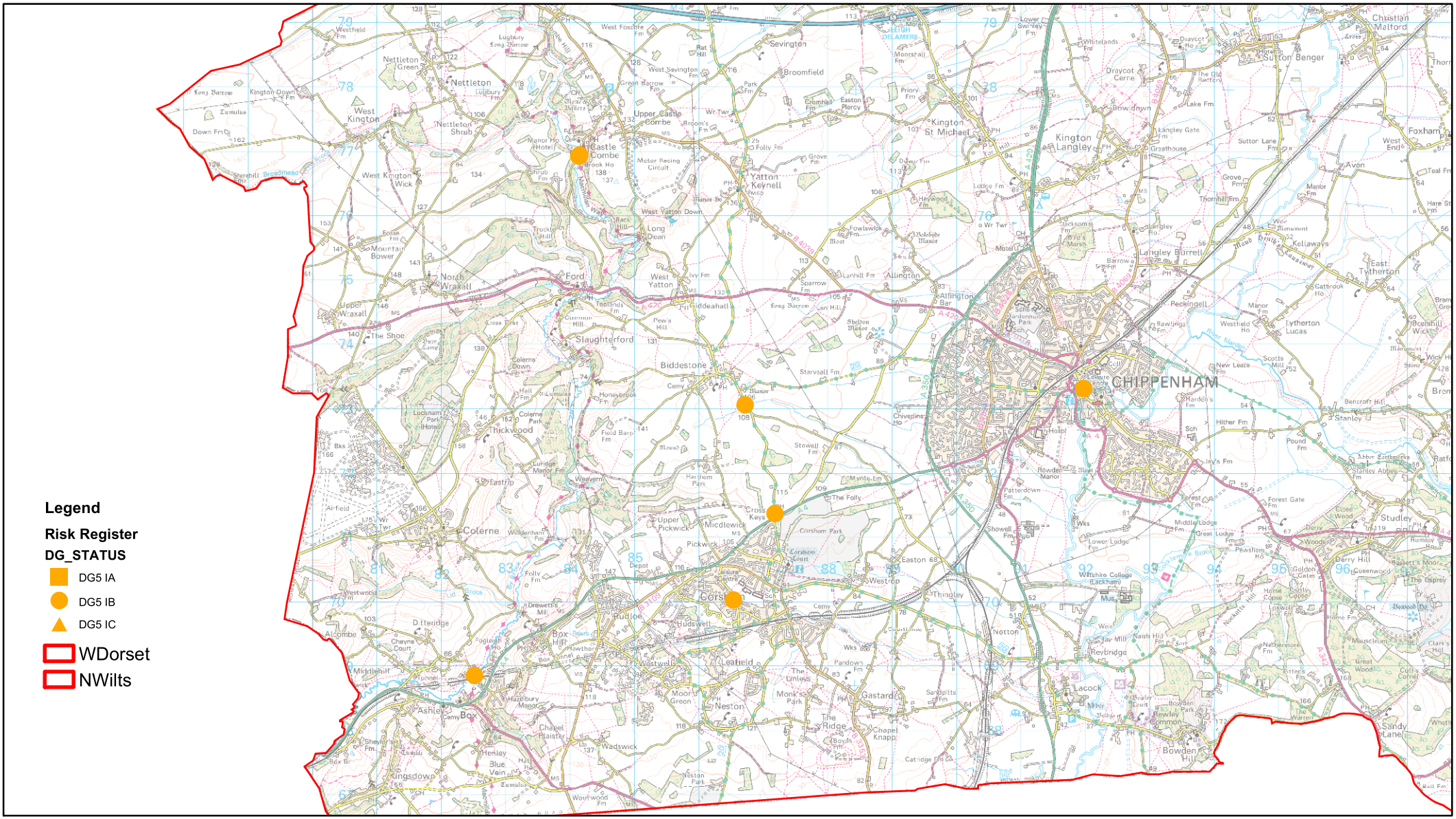

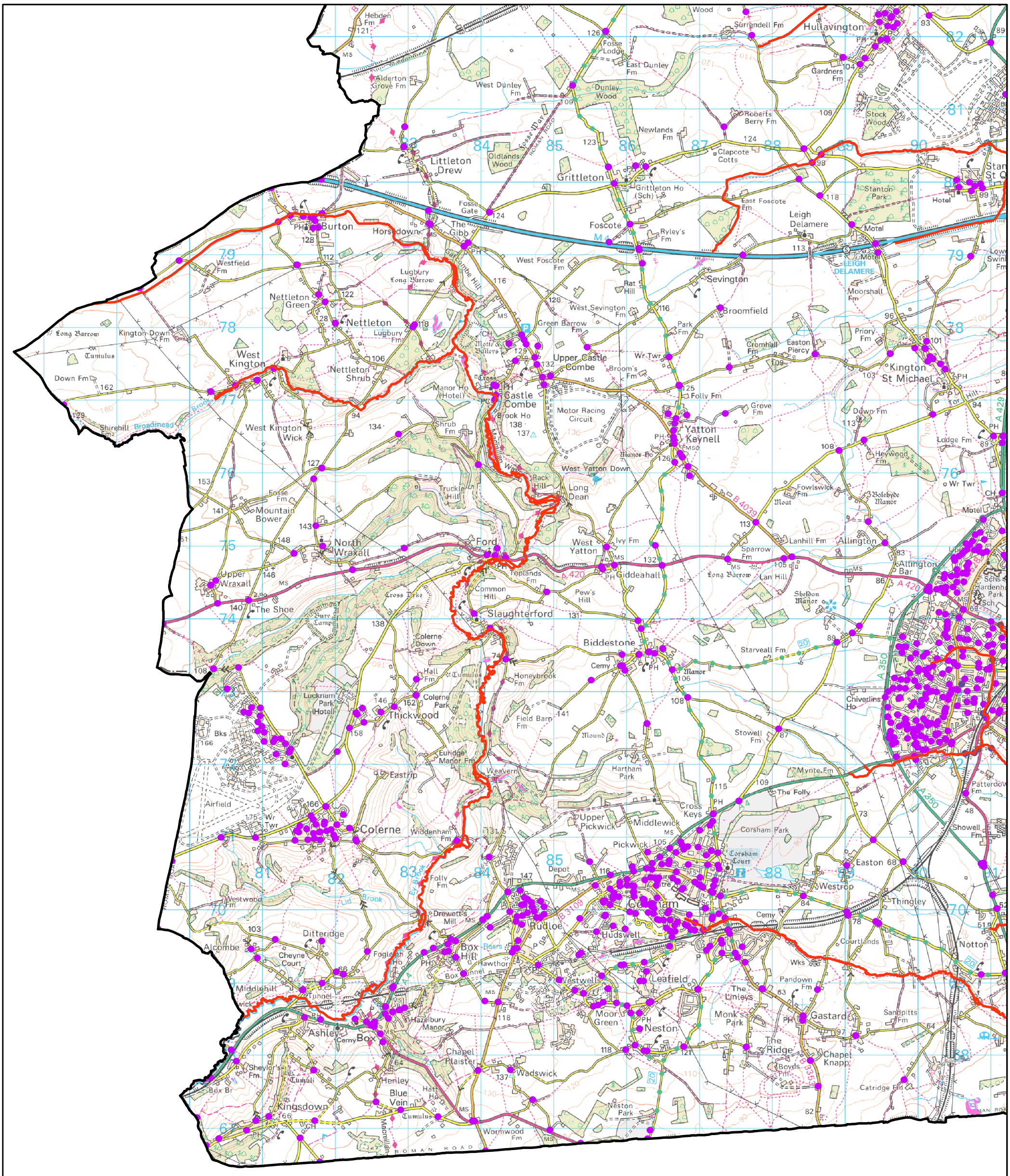
Littleton Drew
Grittleton
Burton
The Gibb
Foscote
M4
Leigh Delamere
Sevington
Nettleton
Nettleton Green
West Kington
Castle Combe
Upper Castle Combe
Yatton Keynell
Kington St Michael
Hullavington
Stanton Park
Broomfield
Moorshall Fm
Priory Fm
Easton Piercy
Cromhall Fm
Broom's Fm
Folly Fm
Grove Fm
Down Fm
Lodge Fm
Heywood Fm
Fowlswick Fm
Bolehyde Manor
Allington
Lanhill Fm
Sparrow Fm
Starveall Fm
Chiverlins Ho
Showell Fm
Patterdown Fm
Thingley
Notton
Courtlands
Wks
Pandown Fm
Gastard
Sandpitts Fm
Catridge Fm
Chapel Knapp
Boyds Fm
The Ridge
Neston
Neston Park
Moor Green
Wadswick
Wormwood Fm
Slaughterford
Ford
North Wraxall
Upper Wraxall
The Shoe
Mountain Bower
Thickwood
Colerne
Biddestone
Giddeahall
West Yatton
Ivy Fm
Toplands Fm
Common Hill
Pew's Hill
Honeybrook Fm
Field Barn Fm
Hartham Park
Upper Pickwick
Middlewick
Cross Keys
Pickwick
Corsham
Corsham Court
Corsham Park
Easton
Westrop
Hudswell
Ludloe
Drewett's Mill
Box
Box Hill
Westwells
Leafield
Ashley
Kingsdown
Henley
Blue Vein
Chapel Plaister
Neston
Gastard
Ditteridge
Alcombe
Middlehill
Cheyne Court
Foghelm Ho
Hazelbury Manor
Eastrip
Euridge Manor Fm
Weavern Fm
Widdenham Fm
Folly Fm
Westwood Fm
Lid Brook
Ey Brook
Macmillan Way
Fosse Way
ROMAN ROAD
A420
A350
A429
B4039
B3109
Motel
Hotel
Motel
LEIGH DELAMERE
Motel
Motel
Motel

Our vision

"Engineering a better environment for people and the planet"

Our mission

"To solve complex problems for the benefit of clients, communities and the climate"

Our values

People orientated

Individually and collectively, people are our business.
We strive to create environments for everyone to flourish and thrive.

Flexible

Pragmatic by nature and dedicated to getting the job done to the highest possible standard.

Professional

Operating at pace with integrity to deliver technical and robust solutions.

Environmentally aware

We understand our responsibility to the environment, it shapes our decision making and informs our practice.

Innovative

Our forensic questioning provides the ability to deliver appropriate innovations at every stage on every project.

Relationship focused

We value individuality and the benefits of working collaboratively to achieve positive outcomes for all.

