

1:100 @ A3

1m 0 1m 2m 3m 4m 5m

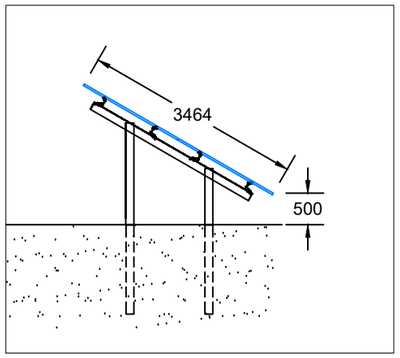

1:100 @ A3

1m 0 1m 2m 3m 4m 5m

1:200@ A3

2m 0 2m 4m 6m 8m 10m

Drawing No.	Rev	Approved
0002	C	MF

Notes:

1. This drawing is to be read in conjunction with associated specifications and all other electrical, roofing engineers.
2. Do not scale from this drawing
3. This drawing shows the design intent of the proposed building. This drawing shall not be used for installation or fabrications purposes.

Revision

A. New Layout
B. Location Amended
C. Site Relocated

Project
The Old Mill
Teffont Evias
SP3 5RP

Drawing Title

Site Layout

Date	Checked
06/07/2023	06/07/2023

Project No.	Client	Rev.
Q8666		MF

EMPOWER ENERGY LTD.
8 Pintail Business Park | 165 Christchurch Road | Ringwood | Hants | BH24 3AL
01425 461461
e:info@empowerenergy.co.uk w: www.empowerenergy.co.uk

COPYRIGHT LIMITED 2018