THIS DRAWING IS COPYRIGHT
Contractor must take site sizes

1

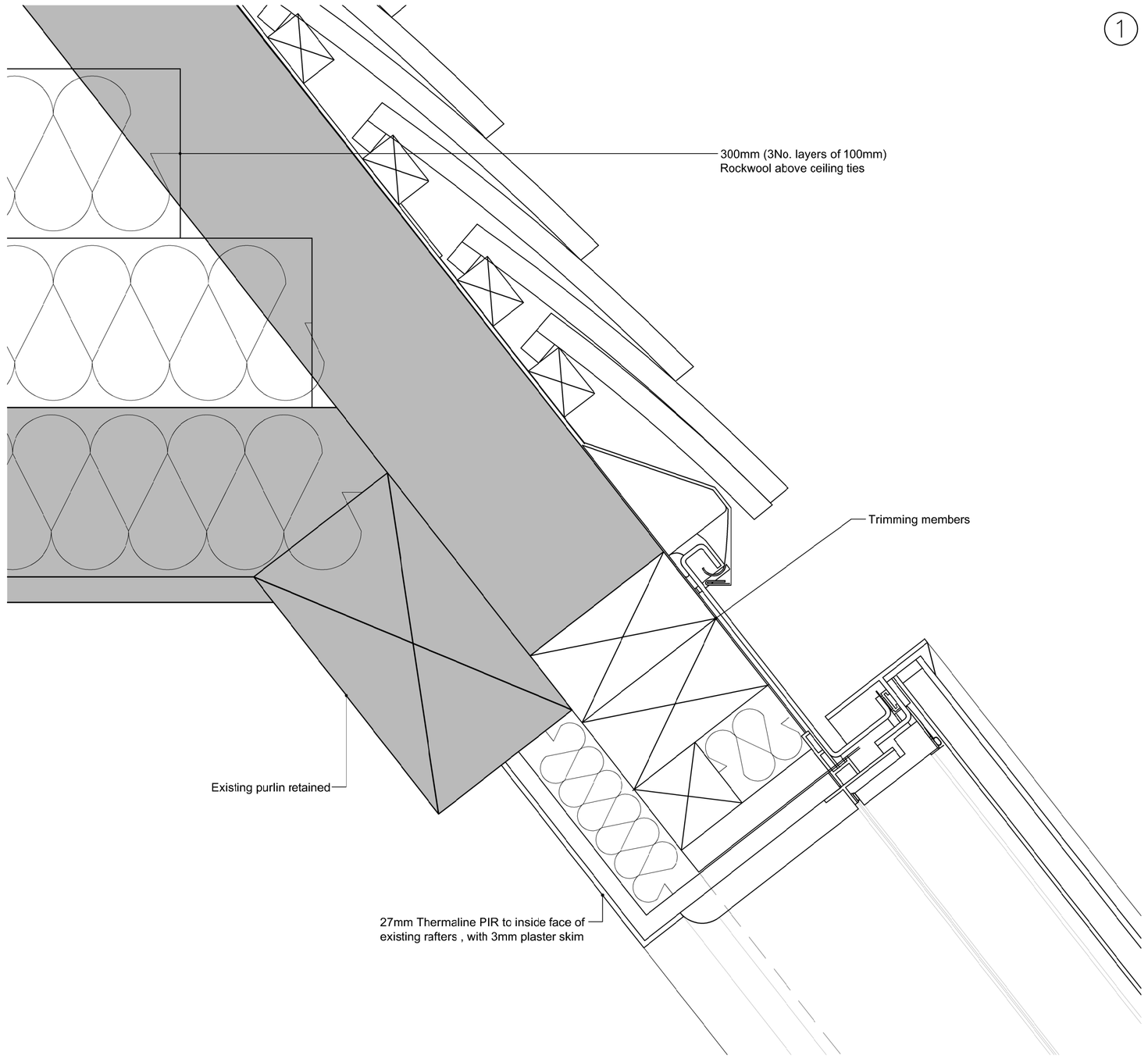

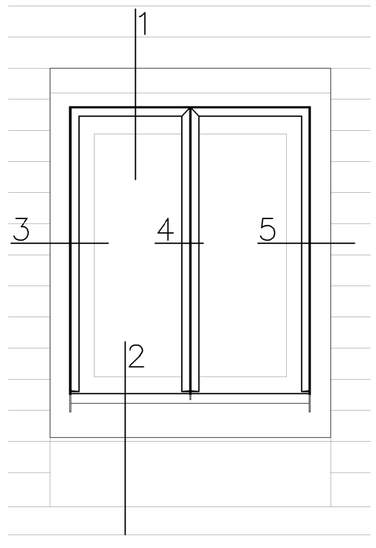

EXTERNAL ELEVATION
PROPOSED ROOFLIGHT
SCALE 1:10

2

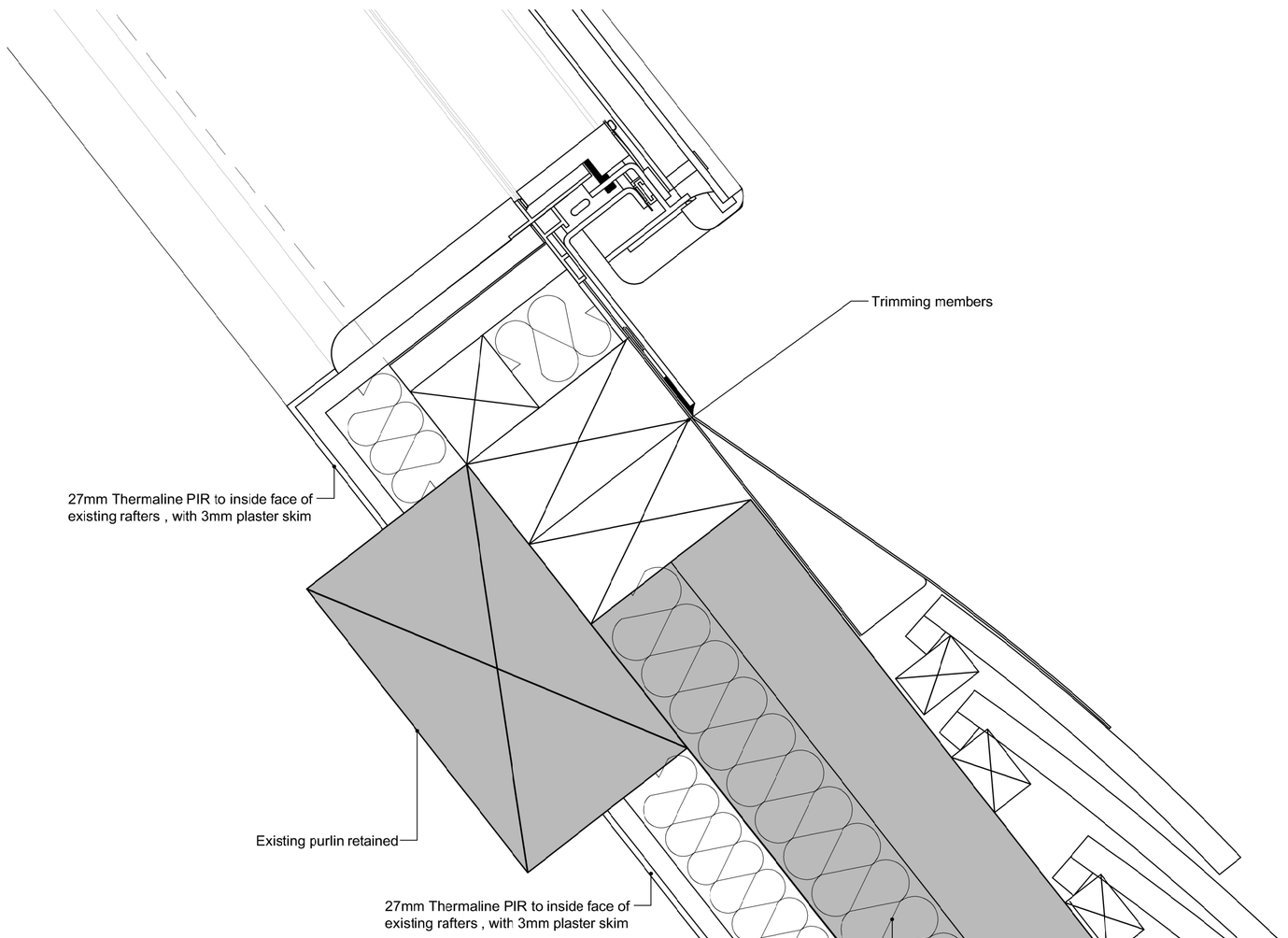

VERTICAL SECTIONS
PROPOSED ROOFLIGHT
SCALE 1:2

3

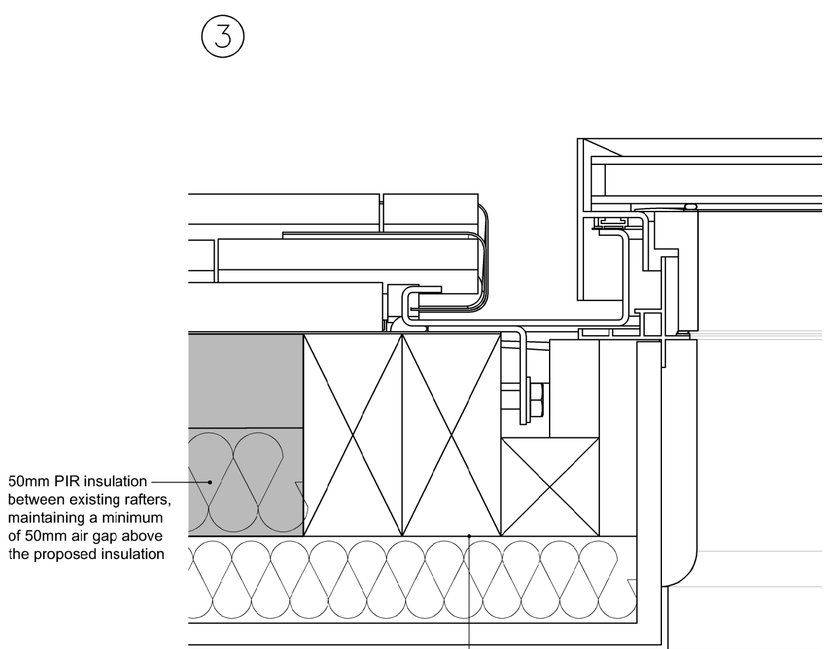

4

5

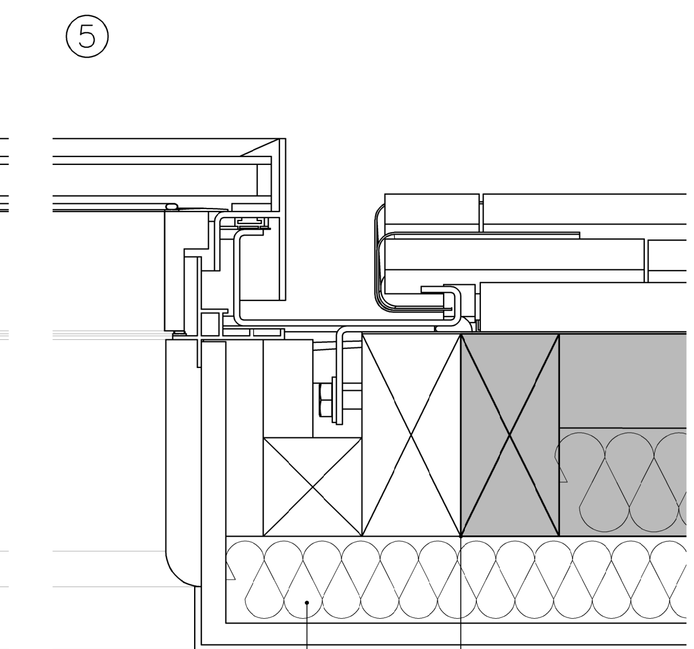

HORIZONTAL SECTIONS
PROPOSED ROOFLIGHT
SCALE 1:2

NOTES:

Roolfights to be The Rooflight Company Conservation Rooflight Ref: E1LG, with proprietary flashings.

0 0.02m 0.06m 0.1m
Scale bar (1:2)

0 0.2m 0.4m 0.6m
Scale bar (1:10)

Rev.	Date		Init

CLIENT
MR P LOXTON-EDWARDS

PROJECT
MANOR FARM HOUSE,
HEDDINGTON

DRAWING
JOINERY DETAILS
PROPOSED ROOFLIGHTS
AND DETAILS OF INSULATION TO ROOF

DRAWN:	Date:	Scale:
ALK	15/11/2023	as stated @ A1
Drawing number: 4075-10		Rev.

DOLMAN
ARCHITECTURAL DESIGNERS BUILDING SURVEYORS
COST CONSULTANTS CDM PRINCIPAL DESIGNERS
Sussex House
Bath Road
Devizes
Wiltshire SN10 2AF
Tel: 01380 729456
Web: www.dolmansurveyors.co.uk
Email: info@dolmansurveyors.co.uk