THIS DRAWING IS COPYRIGHT
Contractor must take site sizes

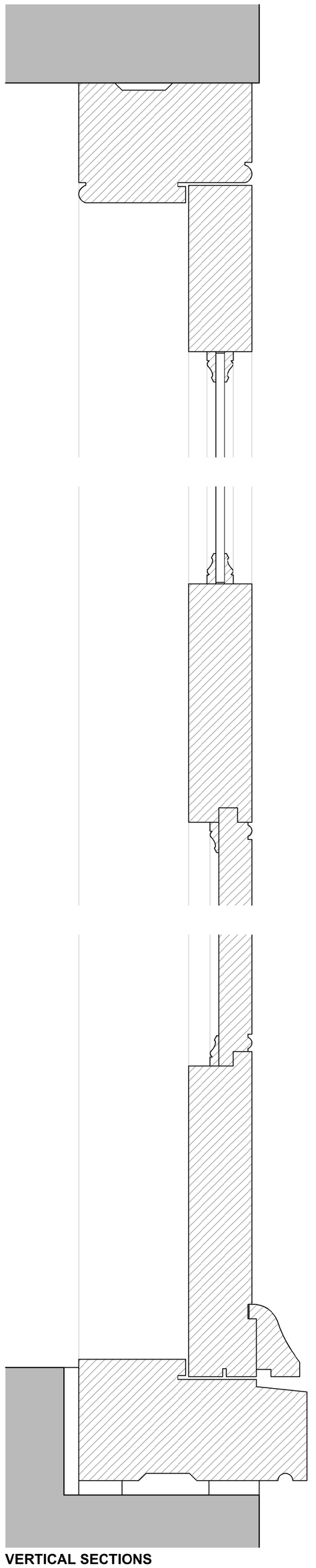

1

2

3

**VERTICAL SECTIONS**
PROPOSED DINING ROOM EXTERNAL DOOR
SCALE 1:2

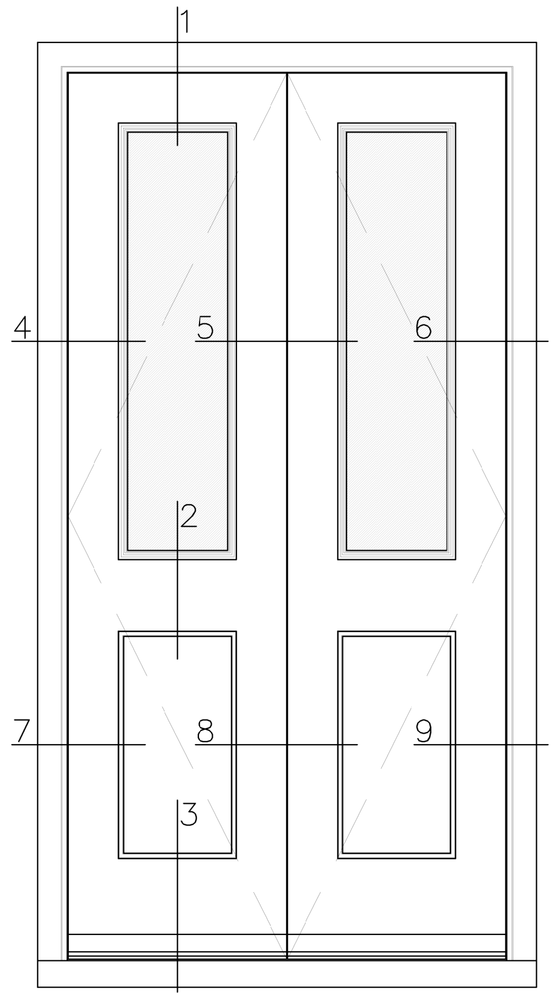


**EXTERNAL ELEVATION**
PROPOSED DINING ROOM EXTERNAL DOOR
SCALE 1:10

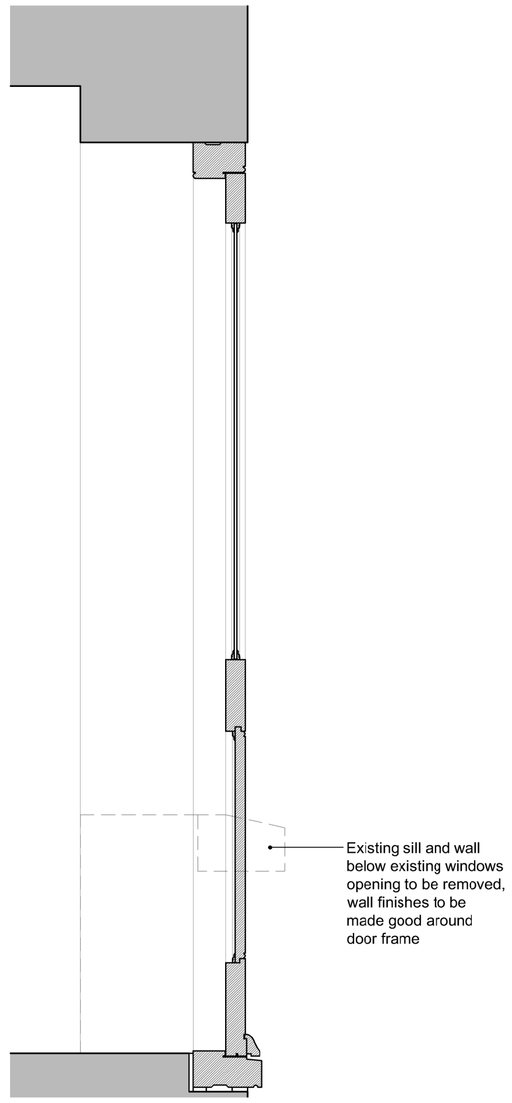


**VERTICAL SECTION**
PROPOSED DINING ROOM EXTERNAL DOOR
SCALE 1:10

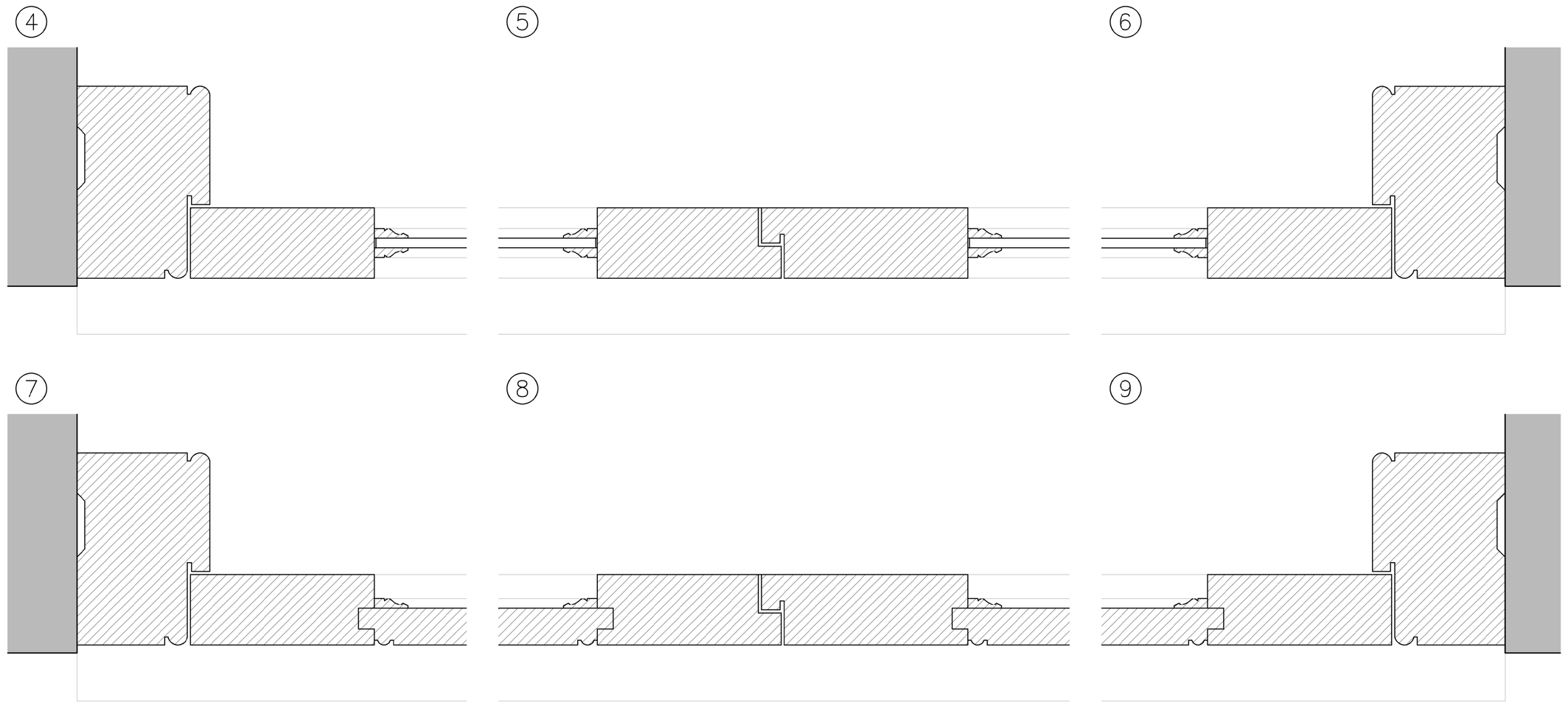


**HORIZONTAL SECTIONS**
PROPOSED DINING ROOM EXTERNAL DOOR
SCALE 1:2

## NOTES:

Pair of doors with meeting stiles, to open outwards

Doors and frames to be hardwood.

Glazing to be 4mm single pane

Ironmongery to include:-
- Brass 5 lever mortice lock with euro cylinder
- Brass lever handles

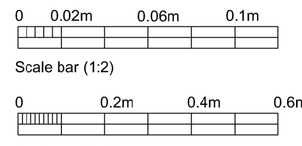


Scale bar (1:2)




Scale bar (1:10)

| Rev. | Date | | Init |
|---|---|---|---|

CLIENT
MR P LOXTON-EDWARDS

PROJECT
MANOR FARM HOUSE,
HEDDINGTON

DRAWING
**JOINERY DETAILS**
PROPOSED DINING ROOM EXTERNAL DOOR

| DRAWN: | Date: | Scale: |
|---|---|---|
| ALK | 08/11/2023 | as stated @ A1 |

Drawing number: **4075-08** Rev.

**DOLMAN**
ARCHITECTURAL DESIGNERS BUILDING SURVEYORS
COST CONSULTANTS CDM PRINCIPAL DESIGNERS
Sussex House
Bath Road
Devizes
Wiltshire SN10 2AF
Tel: 01380 729456
Web: www.dolmansurveyors.co.uk
Email: info@dolmansurveyors.co.uk