

Location Plan 1:1250

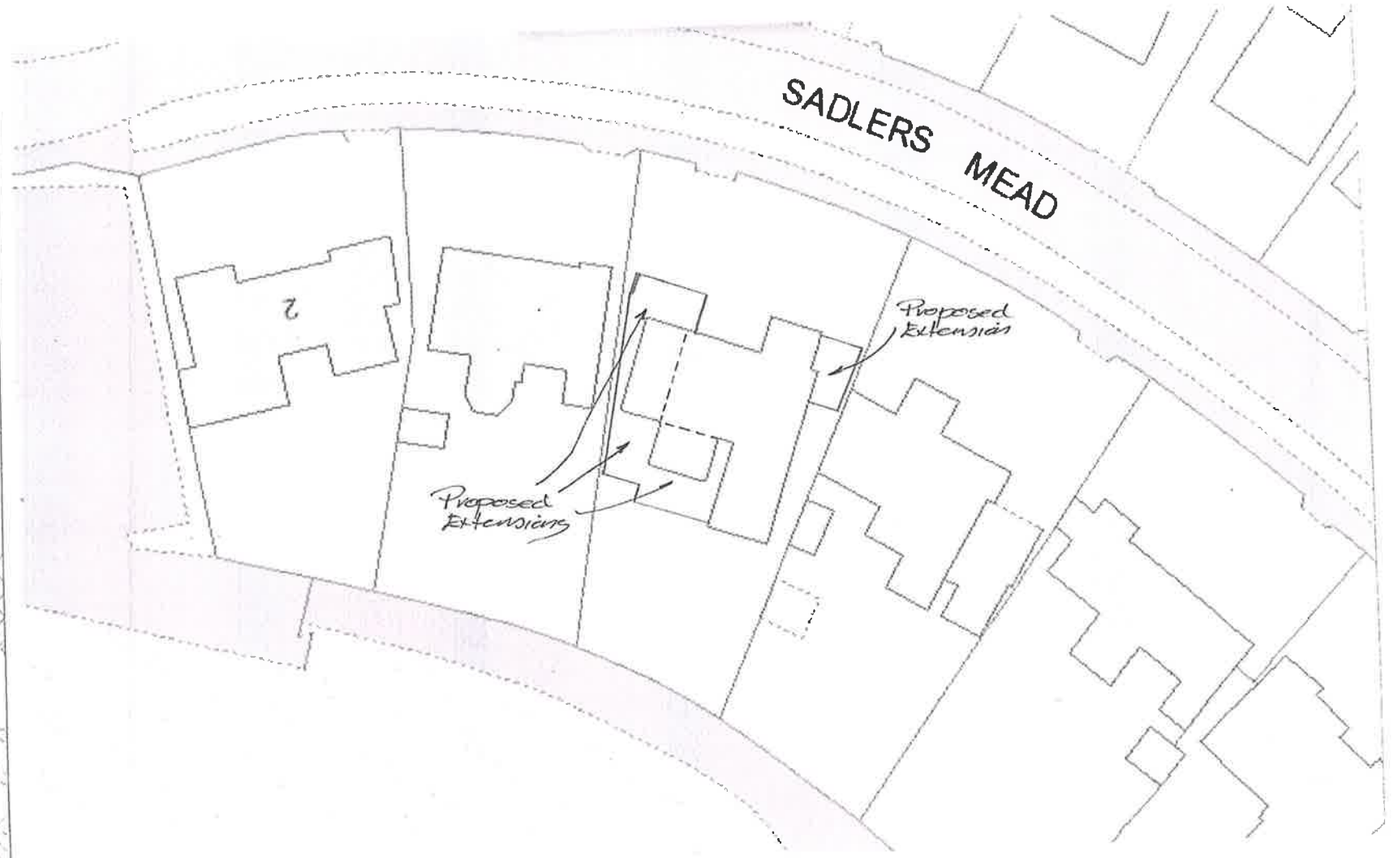

Site Plan 1:500

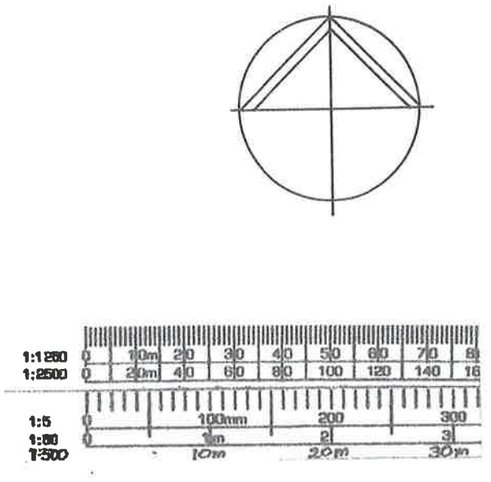

CHRIS HYDE
3 Potley Lane
Corsham, Wilts
SN13 9RY
01225811057

Project
6 Sadlers Mead
Chippenham SN15 3PA
Extensions to Dwelling

Drawing
Location & Site Plan

Scale 1:1250 1:500

Drawing No 2549/5

Date Nov 2003

Drawn Chris Hyde