

Asbestos Demolition/Refurbishment Survey

External Areas
Pear Tree Farm
Pitton Road
Pitton
Salisbury
Wiltshire
SP5 1EG

Date 09/11/2022 **Prepared by: K Howell** **Reviewed by: C Jelfs**

Caveat

Every effort has been made to identify all asbestos materials so far as was reasonably practical to do so within the scope of the survey and the attached report. Methods used to carry out the survey were agreed with the client prior to any works being commenced.

Survey techniques used involved trained and experienced surveyors using the combined approach with regard to visual examination and necessary bulk sampling. It is always possible after a survey that asbestos based materials of one sort or another may remain in the property or area covered by that survey, this could be due to various reasons:

- Asbestos materials existing within areas not specifically covered by this report are therefore outside the scope of the survey
- Materials may be hidden or obscured by other items or cover finishes i.e paint, over boarding, disguising etc. where this is the case then its detection will be impaired.
- Asbestos may well be hidden as part of the structure to a building and not visible until the structure is dismantled at a later date.
- Debris from previous asbestos removal projects may well be present in some areas; general asbestos debris does not form part of this survey, however, all good intentions are made for its discovery.
- Where an area has been previously stripped of asbestos i.e plant rooms, ducts etc. and new coverings added, it must be pointed out that asbestos removal techniques have improved steadily over the years since its introduction. Most notably would be the Control of Asbestos at Work Regulations (1987) laying down certain enforceable guidelines. Asbestos removal prior to this regulation would not be of today's standard and therefore debris may be present below new coverings.
- This survey will detail all areas accessed and all samples taken, where an area is not covered by this survey it will be due to No Access for one reason or another i.e working operatives, sensitive location or just simply no access. It may have been necessary for the limits of the surveyor's authority to be confirmed prior to the survey.
- Access for the survey may be restricted for many reasons beyond our control such as height, inconvenience to others, immovable obstacles or confined space. Where electrical equipment is present and presumed in the way of the survey, no access will be attempted until proof of its safe state is given. Our operatives have a duty of care under the Health and Safety at work act (1974) for both themselves and others.
- In the building where asbestos has been located and it is clear that not all areas have been investigated, any material that is found to be suspicious and not detailed as part of the survey should be treated with caution and sampled accordingly.
- Certain materials contain asbestos to varying degrees and some may be less densely contaminated at certain locations (Artex for example). Where this is the case the sample taken may not be representative of the whole product throughout.
- Where a survey is carried out under the guidance of the owner of the property, or his representative, then the survey will be as per his instructions and guidance at that time.
- Breeze Environmental Consultants Ltd cannot accept any liability for loss, injury, damage or penalty issues due to errors or omissions within this report.
- Breeze Environmental Consultants Ltd cannot be held responsible for any damage caused as part of this survey carried out on your behalf. Due to the nature and necessity of sampling for asbestos some damage is unavoidable and will be limited to just that necessary for the taking of the sample.

Prepared by: **Chris Jelfs – Manager**



Signed:

SECTION **CONTENTS**

1……EXECUTIVE SUMMARY

2……SURVEY TYPE AND METHOD

3……MANAGEMENT REPORT INDEX

4……RESULTS & ANALSIS REPORT – ALL ASBESTOS CONTAINING MATERIALS (INCLUDES PRESUMED MATERIALS)

5……GENERAL RECOMMENDATIONS

APPENDIX I: BUILDING REGISTER & MATERIAL ASSESSMENT ALGORITHM

APPENDIX II: NON-ASBESTOS PHOTOGRAPHIC REPORT

APPENDIX III: SAMPLE RESULTS

APPENDIX IV: DRAWINGS

1.0 EXECUTIVE SUMMARY

Survey objectives; The survey has been commissioned to identify, as far as is reasonably practicable, the presence and extent of Asbestos Containing Materials (ACMs) and to assess their condition to the property known as External Areas Pear Tree Farm Pitton Road Pitton Salisbury Wiltshire SP5 1EG. Our instructions were given by our client. This survey has been undertaken in line with HSE Guidance document HSG 264; Asbestos: The Survey Guide.

1.1 **Brief guide to using this report;** the report is intended to provide sufficient information to enable the Removal of presumed identified asbestos materials at the site. Any specific restrictions to access encountered during the survey are presented in section with general survey limitations detailed in appendix. Both section should be carefully reviewed to identify the areas that were not access during the survey. All areas outside the scope of the survey, or where direct inspection could not be made should be presumed to contain asbestos until proven otherwise.

1.2 **General survey findings;** ACMs have been identified or presumed at the site:

Area	Asbestos Description and Location
001 Barn 1	Cement roof sheets
001 Barn 1	Cement wall sheets
002 Barn 2	Cement roof sheets
004 Store 1	Cement roof sheets
005 Store 2	Cement roof sheets

1.3 **Description**; This building has been surveyed as per our client's instructions. Those areas are listed in the report and identified on the drawings..

1.4 **Details of all non-accessed areas**;

Area	Asbestos Description and Location

1.5 **The purpose of the survey**; to provide detailed marked plans indicating the location and type of asbestos containing materials (ACMs) prior to refurbishment/demolition work.

2.0 SURVEY TYPE AND METHOD

2.1

Building Details	
Client	
Job Reference	**Breeze 331**
Building Reference	
Building Description	**Commercial**
Building Date	**Unknown**
Address	**External Pear Tree Farm Pitton Road Pitton Salisbury Wiltshire SP5 1EG**

Survey Overview	
Survey Type	**Refurbishment & Demolition**
Survey Purpose	**Prior to Refurbishment Works**
Date/Time	**09/11/2022**
Surveyor	**Richard Hitchcock**

2.2 A Refurbishment/Demolition access sampling and identification survey (pre-demolition/major refurbishment survey) was carried out on the 9TH November 2022**.** This survey was conducted in accordance with the HSE guidance note – Asbestos: The Survey Guide HSG 264.

2.3 Samples from each suspected material highlighted were collected to confirm or refute the surveyor's judgement. If the materials sampled were found to contain asbestos, other similar homogenous materials used in the same way in the relevant building were presumed to contain asbestos. Other less homogenous materials and non-asbestos materials would need to be sampled more frequently to confirm whether asbestos was present.

2.4 The Demolition access survey is based on a full sampling of suspected materials regime. The purpose of this survey is to locate, as far as reasonably practical, any asbestos containing materials in the building prior to demolition or major refurbishment. Risk assessment of the ACM's is not applicable.

2.5 The survey was undertaken during normal working hours. The areas under inspection were not occupied during the survey.

2.6 Details and the extent of the premises were obtained whilst on site.

2.7 The report is based on visual identification of suspected materials. These are then confirmed by bulk sampling and analysis.

2.8 The extent and nature of asbestos materials is determined by visible evidence on site and includes an evaluation of its deterioration and homogeneity.

2.9 Investigation were undertaken to cause the minimum possible nuisance and health risk.

2.9 Each room or designated area is inspected individually noting any building materials, which may contain asbestos. All heating, ventilation, services, riser, voids etc, will be accessed where possible and safe to do so. Occupied areas during surveys impose restrictions on sampling and investigation.

2.10 All reasonable efforts are made to access and find any concealed asbestos, e.g. below floor ducts, in ceiling voids and inside convector heaters. However, because of the way that asbestos is used in composite structures and inaccessible places it cannot be guaranteed that all asbestos materials have been located during the surveys.

2.11 Where materials are suspected to contain asbestos fibres, but not sampled due to restrictions, they will be reported as 'suspected'. These materials should be treated as asbestos materials until otherwise identified.

3.0 MANAGEMENT REPORT INDEX

The Management Report found in section 4.0 is an easy to follow guide to the asbestos within the building or buildings. This section details the ACM's only and is useful when managing the ACM's on site as it quickly locates the different types of asbestos, their condition and a brief recommendation. Below is an explanation of the different sections found within the Management report:

Section 1 - **Floor**

Section 1 (floor) describes the floor where the ACM is located, ranging from Basement (**B**) Lower Ground (**LG**) Ground floor (**G**) 1st floor (**1**) to Roof (**R**) Externals (**E**) etc.

Section 2 – Area №

Section 2 (Area №.) is the unique number allocated to that area. If a building is already split up into area numbers, then the surveyor will use this numbering system as the client will be familiar with it. However, if a numbering system is not in place, a unique number will be allocated to each area for identification. This numbering system will also appear on any plans provided to aid cross referencing.

Section 3 – Area Description

Section 3 (area description) is the name given to each area. For example; boiler room, office or kitchen. If an area does not have a description the surveyor will describe it as best they can, sometimes using the areas around it. For example; room next to kitchen area etc.

Section 4 – Material Description and Location

Section 4 (Material description and Location) describes the type of asbestos product and its approximate location within the area. For example; cement flue pipe in ceiling void etc. some products however, do not require locating as it is obvious of their location. ie; floor tiles or toilet cistern etc.

Section 5 – Asbestos Type

Section 5 (Asbestos Type) describes which type of asbestos fibre has been found within the product. The three most common types of asbestos are; Amosite (brown) asbestos, Chrysotile (white) asbestos and Crocidolite (blue) asbestos.

Section 6 – Asbestos Quantity

Section 6 (Asbestos Quantity) is the amount of asbestos fibre found within the sample. The more fibre found, the higher the risk of fibre release when disturbed. For example; asbestos containing floor tiles or toilet cisterns contain a trace amount of asbestos (<5%) so are less likely to release fibre without serious damage being caused to the product. However, materials such as Asbestos Insulation board (AIB) or pipe insulation may have significant (<30%) or even substantial (>30%) amounts of asbestos fibre. This combined with the type, condition, material description and other factors make up the overall risk score / assessment of the ACM.

Section 7 – Sample number / visual identification

Section 7 (Sample number / visual identification) is the unique number allocated to the sample. If an asbestos type has been sampled before during the survey in the same building, it is not uncommon for the surveyor to visually identify or reference an ACM to a previous occurrence. For example; if a suspected AIB panel is sampled in area 2 then a similar looking panel is found again in area 6, this panel may be visually identified / referenced to the previous sample to reduce sampling and limit exposure. This practice is only carried out by surveyors with the sufficient experience and training and if there is any doubt a further sample is taken.

Section 8 – Recommendation

Section 11 (recommendation) is the minimum recommended course of action to be taken:

Mark and Manage is recommended if the ACM is in a safe condition. The product should be marked with asbestos warning labels in accordance with the Health and Safety (safety signs and signals) regulations 1996 and managed in accordance with the Control of Asbestos at Work Regulations 2006 – Section 4.

Encapsulate is recommended if the ACM is in a fair or good condition but the asbestos fibres are not bonded within its matrix and could easily be disturbed.

Removal is recommended if the ACM is in a poor condition with visible debris and the risk cannot be reduced sufficiently by encapsulation, or is likely to be disturbed if not removed. ie; prior to major refurbishment or demolition. **Debris is always recommended for removal.**

RIA is remove if affected, recommended to be removed if any alterations carried out within the area.

All ACM's, regardless of their condition, should be removed in accordance with current legislation prior to any refurbishment or demolition works likely to disturb them.

4.0 RESULTS & ANALSIS REPORT – ALL ASBESTOS CONTAINING MATERIALS (INCLUDES PRESUMED MATERIALS).

The following tables details the asbestos materials found on site, its general condition and recommendation. An explanation of each category can be found in the detailed report index page in section 3.0.

Client			
Survey Address	External Areas Pear Tree Farm Pitton Road Pitton Salisbury Wiltshire SP5 1EG		
Location/Item	001 Barn cement roof sheets		
Reference Number	1		
Sample Number	001		
Photo Details			
Risk Matrix			
Asbestos Type	**1**	**Product Use**	**1**
Condition	**1**	**Surface Treatment**	**1**
Material Risk	**4**	**Action**	**Remove**
Accessibility			
Amount/Extent	**95m2**		
Surveyors Notes			

Client			
Survey Address	External Areas Pear Tree Farm Pitton Road Pitton Salisbury Wiltshire SP5 1EG		
Location/Item	001 Barn cement wall slheets		
Reference Number	2		
Sample Number	Vis Sim 001		
Photo Details			
Risk Matrix			
Asbestos Type	**1**	**Product Use**	**1**
Condition	**1**	**Surface Treatment**	**1**
Material Risk	**4**	**Action**	**Remove**
Accessibility			
Amount/Extent	**6m2**		
Surveyors Notes	**To high level wall above entrance**		

Client			
Survey Address	External Areas Pear Tree Farm Pitton Road Pitton Salisbury Wiltshire SP5 1EG		
Location/Item	002 Barn 2 cement roof sheets		
Reference Number	4		
Sample Number	003		
Photo Details			
Risk Matrix			
Asbestos Type	**1**	**Product Use**	**1**
Condition	**1**	**Surface Treatment**	**1**
Material Risk	**4**	**Action**	**Remove**
Accessibility			
Amount/Extent	**185m2**		
Surveyors Notes			

Client			
Survey Address	External Areas Pear Tree Farm Pitton Road Pitton Salisbury Wiltshire SP5 1EG		
Location/Item	004 Store 1 cement roof sheets		
Reference Number	6		
Sample Number	005		
Photo Details			
Risk Matrix			
Asbestos Type	**1**	**Product Use**	**1**
Condition	**1**	**Surface Treatment**	**1**
Material Risk	**4**	**Action**	**Remove**
Accessibility			
Amount/Extent	**62m2**		
Surveyors Notes			

Client			
Survey Address	External Areas Pear Tree Farm Pitton Road Pitton Salisbury Wiltshire SP5 1EG		
Location/Item	005 Store 2 cement roof sheets		
Reference Number	8		
Sample Number	007		
Photo Details			
Risk Matrix			
Asbestos Type	**1**	**Product Use**	**1**
Condition	**1**	**Surface Treatment**	**1**
Material Risk	**4**	**Action**	**Remove**
Accessibility			
Amount/Extent	**80m2**		
Surveyors Notes			

5.0 GENERAL RECOMMENDATIONS

Recommendations:

Make Trades Aware of Asbestos Present

Remove Asbestos Debris

Remove Asbestos Affected by Refurbishment Works

Asbestos work not requiring a License.

Work with Asbestos Cement, asbestos containing floor tiles, Eternit toilet cisterns and textured coatings (as of October 2006) does not fall under the provision of Asbestos (Licensing) Regulation 1983, but is covered by the requirements of the Health and Safety at Work Act 1974, the Control of Asbestos at Work Regulation 2006 and the Special Waste Regulations 1996. An assessment of the proposed work should be undertaken to determine the level of risk presented and the precautions to take for preventing and controlling exposure whether for maintenance and repair or removal.

Attention should be paid to the following general principles;

- Where work on these products cannot be avoided, keep the materials wet during work and avoid breakage.
- Avoid the use of pneumatic or abrasive power tools. Where their use is unavoidable they should be used on their lowest setting with additional LEV such as cowls fitted to drill bits and shadow vacuuming with an H type unit (BS 5415).
- Carry out higher risk jobs (cutting, drilling) in a single location, where practicable, to make supervision and control more straight forward.
- Use cleaning methods, which minimise dust disturbance/creation. Avoid methods such as sweeping which will make the dust airborne.
- Ensure persons working with the materials are suitably trained and informed in the correct working practises, control methods and risks.
- Area segregation - physical barriers where disturbance is likely to be significant. I.e.; The use of an enclosure and polythene to restrict the spread of asbestos dust.
- Warning notices preventing access to unauthorised persons. Denoted 'respirator zones' where the control limit is likely to be exceeded and denoted 'asbestos area' where the action level is likely to be exceeded.
- Avoid attachment or routing through it.
- Wear suitable RPE/PPE.
- Keep the work area clean during work and thoroughly clean on completion.
- Dispose of waste and debris safely at the appropriate waste disposal sites.
- Item remaining in situ should be clearly identified by suitable warning signs and routinely inspected for damage

Asbestos work requiring a licence

(Asbestos insulation, asbestos coating (not including textured coating), asbestos insulation board (AIB)

Where the risk of interference is unlikely the materials can be maintained on site. They should be maintained in a safe condition and should be clearly identified by suitable warning signs and routinely inspected for damage. They must not be drilled or abraded in any way. Asbestos materials should be removed prior to refurbishment, where damage is likely to be sustained, where they are vulnerable to damage during the occupant's activities and where deterioration is likely.

A contractor licensed by the Health & Safety Executive must carry out any work on asbestos bearing materials as listed above. The current notification period to the Health and Safety Executive is 14 days, and must be carried out in accordance with current legislation.

Prior to the start of work an assessment of risk and plan of work should be made in writing and submitted to the HSE. This should include, as a minimum standard.

- A description of the work – type and duration.
- Type, quantity and location of asbestos.
- Steps taken to prevent and reduce exposure to the lowest level reasonably practicable and to control the release of asbestos into the environment.
- Reason/justification for work methods i.e. where controlled/wet-stripping methods cannot be used.
- Expected exposure limits and likely people affected.
- Procedures for selection, use, provision and decontamination of RPE/PPE.
- Procedures for waste removal and disposal
- Procedures for dealing with emergencies
- Enclosure details, location, LEV, warning signs.
- Training of employees and their suitability to the work environment.

APPENDIX I

BUILDING REGISTER
&
MATERIAL ASSESSMENT ALGORITHM

Material Assessment Algorithm

The material assessment looks at the type and condition of the Asbestos Containing materials (ACM), and the ease which it will release fibres if disturbed. The table below gives a guide on how each sample variables is scored.

Sample Variable	Description	Score
Product/Use	Asbestos reinforced composites (plastics, resins, mastics, roofing felts, vinyl floor tiles, semi-rigid paints or decorative finishes, asbestos cement etc)	1
	Asbestos insulating board, mill boards, other low density insulation boards, asbestos textiles, gaskets, ropes and woven textiles, asbestos paper and felt	2
	Thermal insulation (eg pipe and boiler lagging), sprayed asbestos, loose asbestos, asbestos mattresses and packing	3
Condition	Good condition: no visible damage	0
	Low damage: a few scratches or surface marks; broken edges on boards, tiles etc	1
	Medium damage: significant breakage of materials or several small areas where material has been damaged revealing loose asbestos fibres	2
	High damage or delamination of materials, sprays and thermal insulation. Visible asbestos debris	3
Surface Treatment	Composite material containing asbestos: reinforced plastics, resins, vinyl tiles	0
	Enclosed sprays & lagging, asbestos insulation board (with exposed face painted or encapsulated), cement products.	1
	Unsealed asbestos insulation board, or encapsulated lagging & sprays	2
	Unsealed lagging & sprays	3
Asbestos Type	No Asbestos	0
	Chrysotile	1
	Amosite	2
	Crocidolite	3

The Score for each of the four sample variables is added up to give a Total Material Score, Which will indicate the level of Action required as shown in the table below.

Total Material Score	0	1-4	5-6	7-9	10-12
Fibre Release	None	Very low	Low	Medium	High

BUILDING REGISTER

Building: External Areas Pear Tree Farm Pitton Road Pitton Salisbury Wiltshire SP5 1EG Date: 09/11/2022 Floor Ground

Area Ref #	Asbestos located Y/N	Sample Ref	Location / Description / Comments	Prod Type 1, 2 or 3	Damage 0, 1, 2, 3	Surface Treat 0, 1, 2 or 3	Asbestos Type 0, 1, 2 or 3	Total Points	Access Low 1 Med 2 High 3	ID P SP S VS	Action E R MM NAD
G	Y	Sample 001/R1	001 Barn 1 cement roof sheets	1	1	1	1	4	1		Remove
G	Y	Vis Sim 001/R2	001 Barn 1 cement wall sheets to high level above entrance	1	1	1	1	4	1		Remove
G	N	Sample 002/R3	001 Barn 1 damp proof course to brickwork	0	0	0	0	0	0		NADIS
G	Y	Sample 003/R4	002 Barn 2 cement roof sheets	1	1	1	1	4	1		Remove
G	N	Sample 004/R5	002 Barn 2 damp proof course to brickwork	0	0	0	0	0	0		NADIS
G	N	Sample 008/R9	002 Barn 2 window putty to all windows	0	0	0	0	0	0		NADIS
G			003 Metal Shed								NAD
G	Y	Sample 005/R6	004 Store 1 cement roof sheets	1	1	1	1	4	1		Remove
G	N	Sample 004/R5	004 Store 1 damp proof course to brickwork	0	0	0	0	0	0		NADIS
G	N	Vis Sim 08/R10	004 Store 1 window putty to all windows	0	0	0	0	0	0		NADIS
G		Sample 007/R8	005 Store 2 cement roof sheets	1	1	1	1	4	1		Remove

NADIS= No Asbestos Detected In Sample

NAD= No Asbestos Detected

APPENDIX II

ADDITIONAL PHOTOGRAPHIC REPORT

Survey Address	External Areas Pear Tree Farm Pitton Road Pitton Salisbury Wiltshire SP5 1EG
Photo Details	

Client	
Survey Address	Externals Areas Pear Tree Farm Pitton Road Pitton Salisbury Wiltshire SP5 1EG
Location/Item	001 Barn 1Damp proof course
Reference Number	3
Sample Number	002
Photo Details	

Client	
Survey Address	Externals Areas Pear Tree Farm Pitton Road Pitton Salisbury Wiltshire SP5 1EG
Location/Item	002 Barn 2 Damp proof course
Reference Number	5
Sample Number	004
Photo Details	

Client	
Survey Address	Externals Areas Pear Tree Farm Pitton Road Pitton Salisbury Wiltshire SP5 1EG
Location/Item	004 Store 1 Damp proof course
Reference Number	7
Sample Number	006
Photo Details	

Client	
Survey Address	Externals Areas Pear Tree Farm Pitton Road Pitton Salisbury Wiltshire SP5 1EG
Location/Item	002 Barn 2 window putty
Reference Number	9
Sample Number	008
Photo Details	

Client	
Survey Address	Externals Areas Pear Tree Farm Pitton Road Pitton Salisbury Wiltshire SP5 1EG
Location/Item	004 Store 1 window putty
Reference Number	10
Sample Number	Vis Sim 008
Photo Details	

APPENDIX III

SAMPLE RESULTS

ENVIROCHEM
Analytical Laboratories Ltd.
12 The Gardens
Broadcut, Fareham
Hampshire
PO16 8SS

UKAS TESTING
1227

Tel: (01329) 287777
Fax: (01329) 287755
www.envirochem.co.uk
office@envirochem.co.uk

Our Ref: J248566 Fl: 15
Your Ref:
Date: 14/11/2022

Asbestos Fibre Identification Report

Client:	Breeze Environmental Ltd Unit 6 Centre One, Lysander Way, Old Sarum, Salisbury, SP4 6BU
Site Address:	Peartree Farm, Pitton Road, Pitton, Salisbury, Wiltshire, SP5 1EG
Sampled By:	Breeze Environmental Ltd
Date sampled/received:	10th November 2022
Date analysed:	14th November 2022
Analyst/s:	Raphael Mirzaians
Analysis Location:	12 The Gardens, Broadcut, Fareham, Hampshire, PO16 8SS

ANALYTICAL PROCEDURE

Fibre identification was carried out in accordance with the documented `in-house' method (2.01) based on the HSE Guidance Note HSG 248. These employed stereo microscopy, polarized microscopy and dispersion staining techniques.

RESULTS

Sample No.	Sample Ref.	Location	Asbestos Detected	Asbestos Type
BREEZE/RH/001	BS816196	Cement Roof Sheets	Yes	Chrysotile
BREEZE/RH/002	BS816197	Damp Proof Course	No	
BREEZE/RH/003	BS816198	Cement Roof Sheets	Yes	Chrysotile
BREEZE/RH/004	BS816199	Damp Proof Course	No	

NOTES:
1. Sample(s) were examined for the presence of 6 types of asbestos fibres: crocidolite (blue), amosite (brown), chrysotile (white), anthophyllite, actinolite and tremolite.
2. The results shown in this test report specifically refer to the sample(s) tested as received unless otherwise stated and samples collected by the client are evaluated using information provided by the client. For samples collected by the client the date of receipt is deemed to be the same as the date sampled.
3. Envirochem is a UKAS accredited laboratory for sampling and identification of asbestos containing materials.
4. Comments, observations and opinions are outside the scope of UKAS accreditation.
5. The analytical method in the HSG248 does not quantify the amount of asbestos present, therefore UKAS accreditation does not permit quantification.
6. If, during fibre identification, only 1 or 2 fibres are seen and identified as asbestos, then the term 'trace asbestos identified' is used.
7. This report shall not be reproduced except in full, without written approval of Envirochem.
8. Samples are retained for 6 months, report kept for 5 years from the date of authorisation of this report.

SIGNATURE:  Authorised signatory PRINT NAME: Raphael Mirzaians DATE AUTHORISED: 14/11/2022

ENVIROCHEM
Analytical Laboratories Ltd.
12 The Gardens
Broadcut, Fareham
Hampshire
PO16 8SS

UKAS TESTING
1227

Tel: (01329) 287777
Fax: (01329) 287755
www.envirochem.co.uk
office@envirochem.co.uk

Our Ref: J248566 FI: 15
Your Ref:
Date: 14/11/2022

Asbestos Fibre Identification Report

Client:	Breeze Environmental Ltd Unit 6 Centre One, Lysander Way, Old Sarum, Salisbury, SP4 6BU
Site Address:	Peartree Farm, Pitton Road, Pitton, Salisbury, Wiltshire, SP5 1EG
Sampled By:	Breeze Environmental Ltd
Date sampled/received:	10th November 2022
Date analysed:	14th November 2022
Analyst/s:	Raphael Mirzaians
Analysis Location:	12 The Gardens, Broadcut, Fareham, Hampshire, PO16 8SS

ANALYTICAL PROCEDURE

Fibre identification was carried out in accordance with the documented `in-house' method (2.01) based on the HSE Guidance Note HSG 248. These employed stereo microscopy, polarized microscopy and dispersion staining techniques.

RESULTS

Sample No.	Sample Ref.	Location	Asbestos Detected	Asbestos Type
BREEZE/RH/005	BS816200	Cement Roof Sheets	Yes	Chrysotile
BREEZE/RH/006	BS816201	Damp Proof Course	No	
BREEZE/RH/007	BS816202	Cement Roof Sheets	Yes	Chrysotile
BREEZE/RH/008	BS816203	Window Putty	No	

NOTES:
1. Sample(s) were examined for the presence of 6 types of asbestos fibres: crocidolite (blue), amosite (brown), chrysotile (white), anthophyllite, actinolite and tremolite.
2. The results shown in this test report specifically refer to the sample(s) tested as received unless otherwise stated and samples collected by the client are evaluated using information provided by the client. For samples collected by the client the date of receipt is deemed to be the same as the date sampled.
3. Envirochem is a UKAS accredited laboratory for sampling and identification of asbestos containing materials.
4. Comments, observations and opinions are outside the scope of UKAS accreditation.
5. The analytical method in the HSG248 does not quantify the amount of asbestos present, therefore UKAS accreditation does not permit quantification.
6. If, during fibre identification, only 1 or 2 fibres are seen and identified as asbestos, then the term 'trace asbestos identified' is used.
7. This report shall not be reproduced except in full, without written approval of Envirochem.
8. Samples are retained for 6 months, report kept for 5 years from the date of authorisation of this report.

SIGNATURE: Authorised signatory PRINT NAME: Raphael Mirzaians DATE AUTHORISED: 14/11/2022

APPENDIX IV

DRAWINGS

KEY

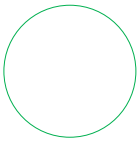

NAD = No Asbestos Detected

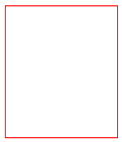

Positive Asbestos

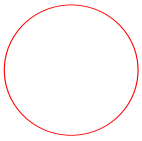

No Access

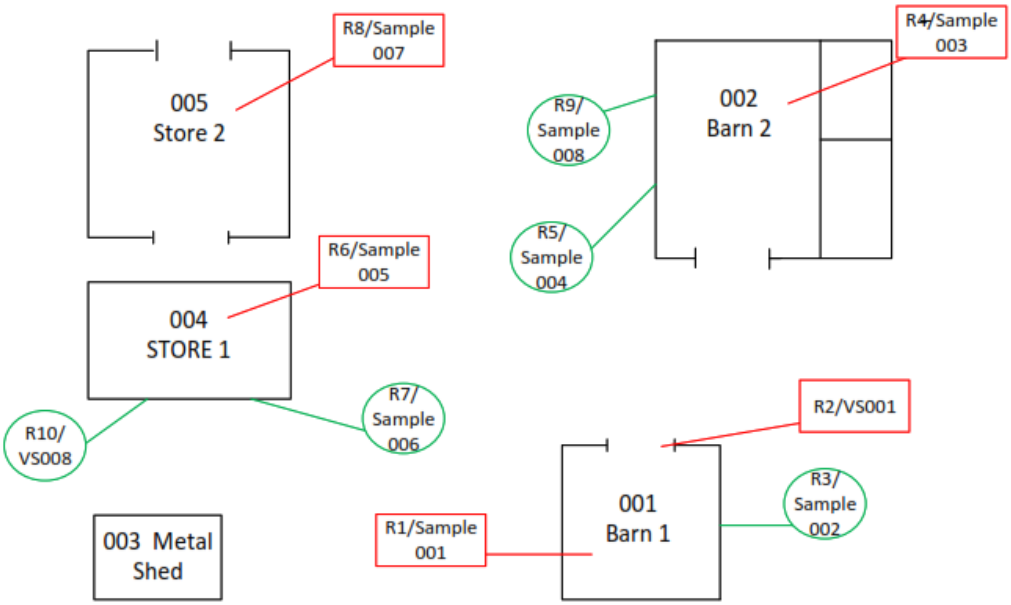
R8/Sample 007
005
Store 2
R4/Sample 003
R9/ Sample 008
002
Barn 2
R5/ Sample 004
R6/Sample 005
004
STORE 1
R7/ Sample 006
R10/ VS008
R2/VS001
R3/ Sample 002
001
Barn 1
R1/Sample 001
003 Metal Shed

+