SAPPHIRE
SIGNMAKERS



CLIENT: HOBBYCRAFT	SITE NAME: SAILSBURY
DRAWING NO : 40668-1	DATE: 28-09-2023
DRAWN BY: LP	SCALE: 1-50 A3
PLANNING: -	

REVISION	DATE	REV BY	NOTES
-	-	-	-

HOBBYCRAFT - SAILSBURY

COLOURS SHOWN MAY NOT ACCURATELY MATCH ANY COLOUR REFERENCES. SIZES IN mm UNLESS STATED OTHERWISE. VISUALS SHOWN ARE ARTISTS IMPRESSIONS ONLY AND MUST NOT BE TAKEN AS AN EXACT REPRESENTATION OF THE COMPLETED SIGNAGE ON SITE © COPYRIGHT SAPPHIRE SIGNS LTD 2023. TEL 01482 474888 SAPPHIRE HOUSE, BONTOFT AVENUE, HULL, HU5 4HF

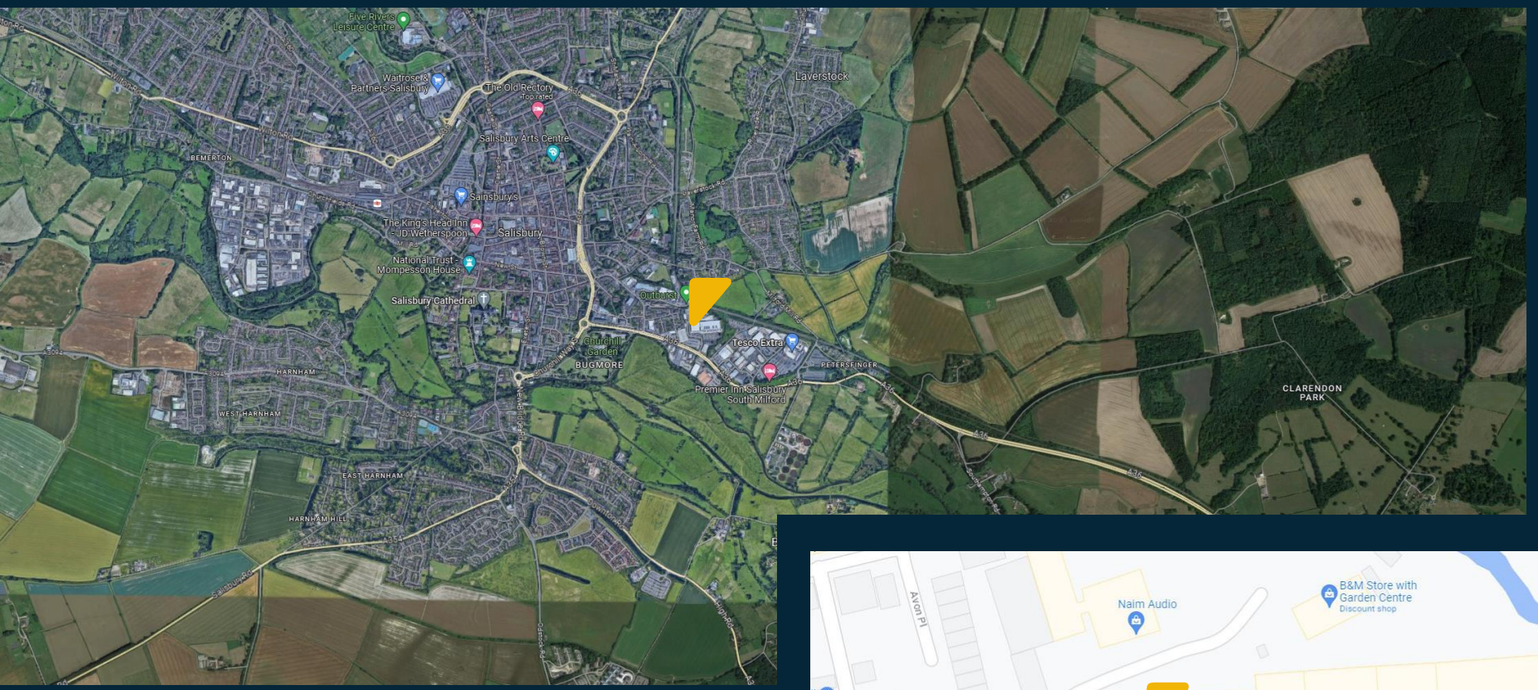

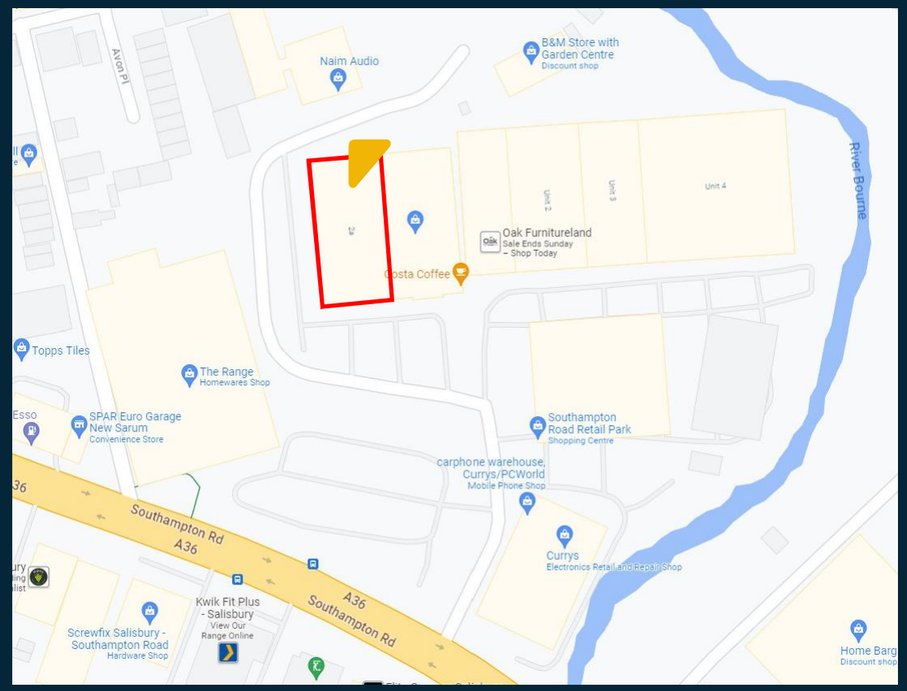



SAILSBURY

HOBBYCRAFT, SOUTHAMPTON RD, SALISBURY SP1 2LB

HOBBYCRAFT - SAILSBURY

SITE LOCATION

SAPPHIRE SIGNMAKERS

COLOURS SHOWN MAY NOT ACCURATELY MATCH ANY COLOUR REFERENCES. SIZES IN mm UNLESS STATED OTHERWISE. VISUALS SHOWN ARE ARTISTS IMPRESSIONS ONLY AND MUST NOT BE TAKEN AS AN EXACT REPRESENTATION OF THE COMPLETED SIGNAGE ON SITE © COPYRIGHT SAPPHIRE SIGNS LTD 2023. TEL 01482 474888 SAPPHIRE HOUSE, BONTOFT AVENUE, HULL, HU5 4HF









HOBBYCRAFT - SAILSBURY

EXISTING SITE PHOTIS

SAPPHIRE SIGNMAKERS

COLOURS SHOWN MAY NOT ACCURATELY MATCH ANY COLOUR REFERENCES. SIZES IN mm UNLESS STATED OTHERWISE. VISUALS SHOWN ARE ARTISTS IMPRESSIONS ONLY AND MUST NOT BE TAKEN AS AN EXACT REPRESENTATION OF THE COMPLETED SIGNAGE ON SITE © COPYRIGHT SAPPHIRE SIGNS LTD 2023. TEL 01482 474888 SAPPHIRE HOUSE, BONTOFT AVENUE, HULL, HU5 4HF

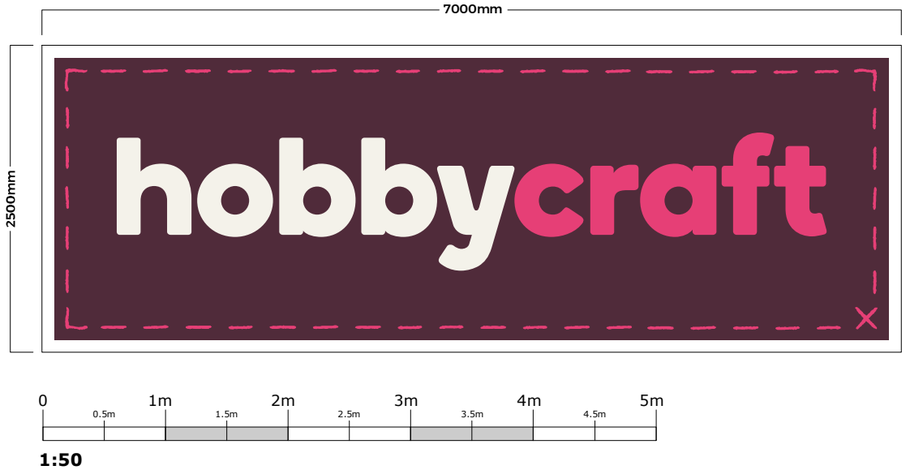

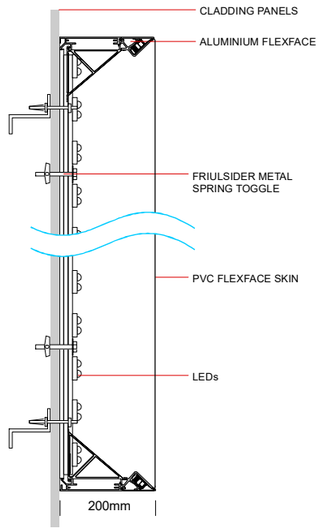

1No. New internally illuminated flex face box complete with digitally printed blockout flex face skin.

Box powder coated to match RAL 3007 Satin and new LEDs to be installed.

Text, stitch & border details to illuminate only.



1No. New internally illuminated folded aluminium tray sign complete with 80mm returns all round.

Face panel fret cut with 10mm LED opal step inlaid letters. Full fabricated Dibond back tray required.

Face panels powder coated RAL 3007 Semi Gloss

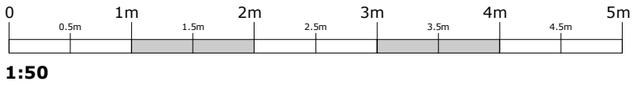



COLOURS SHOWN MAY NOT ACCURATELY MATCH ANY COLOUR REFERENCES. SIZES IN mm UNLESS STATED OTHERWISE. VISUALS SHOWN ARE ARTISTS IMPRESSIONS ONLY AND MUST NOT BE TAKEN AS AN EXACT REPRESENTATION OF THE COMPLETED SIGNAGE ON SITE © COPYRIGHT SAPPHIRE SIGNS LTD 2023. TEL 01482 474888 SAPPHIRE HOUSE, BONTOFT AVENUE, HULL, HU5 4HF