

Typical Bin Store
For Holiday Let units B1 and B2

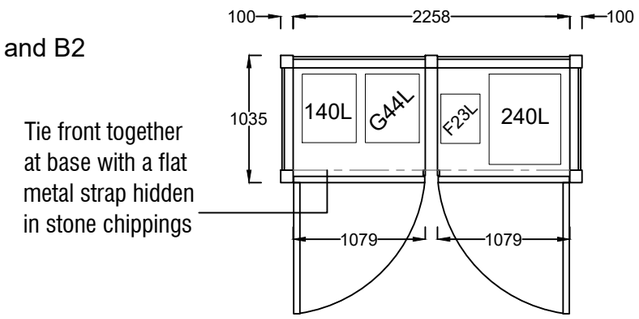

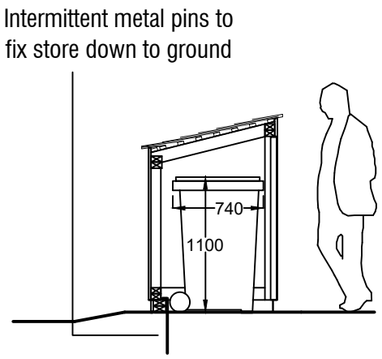

Bin store
Scale 1:50 @ A3

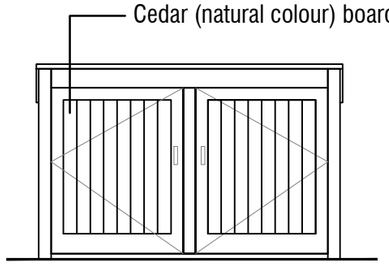

Front Elevation

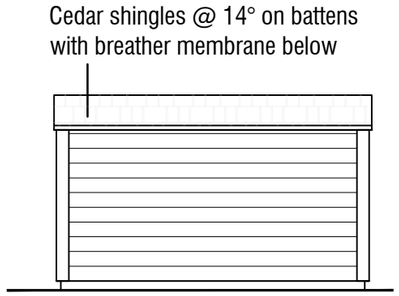

Rear Elevation

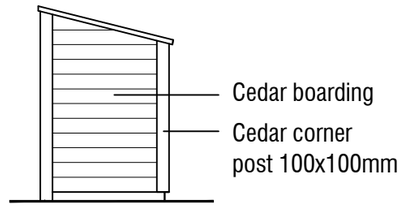

Typical Side Elevation

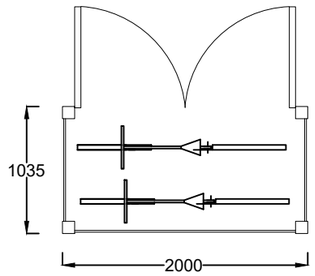

Floor Plan

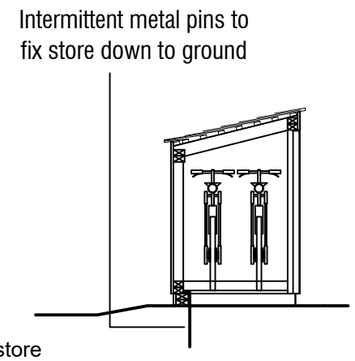

Bike store
Scale 1:50 @ A3

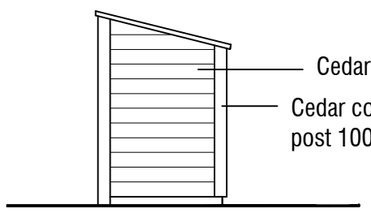

Typical Side Eevation

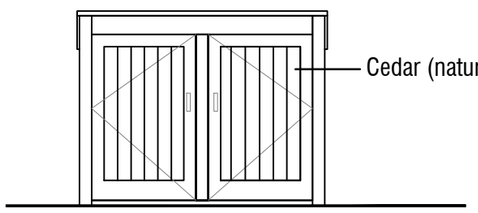

Front Elevation

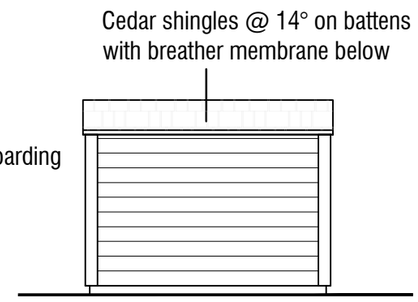

Rear Elevation

THIS DRAWING IS COPYRIGHT © Western Design Ltd 2022

REPRODUCING THESE DRAWINGS BY PRINTING OR COPYING MAY LEAD TO ERRORS, PLEASE REFER TO SCALE BAR. DO NOT SCALE OFF THESE DRAWINGS FOR CONSTRUCTION PURPOSES. IF ANY DISCREPANCIES ARE FOUND, PLEASE CONTACT WESTERN DESIGN ARCHITECTS IMMEDIATELY.

DESIGNERS RISK ASSESSMENT- HEALTH AND SAFETY THE CONSTRUCTION (DESIGN AND MANAGEMENT) REGULATIONS 2015

A design and risk assessment Drawing CDM01 should form part of our drawing package, if you have not received this from us by post, email or by collection please contact us for a copy before moving forward with the project.

REV.	DETAILS	BY	CKD	DATE
-	-	-	-	-

WDA
westerndesignarchitects.com
Western Design Architects
12 The Granary, Hinton Business Park, Tarrant Hinton, Dorset, DT11 8JF
T:01258 830675 E:info@westerndesign.co.uk

CLIENT
HFH Investments Ltd

PROJECT
Berrybrook Farm

DRAWING TITLE
Bin & Bike Storage
Longbarn B

DATE	DRAWN BY	CHECKED BY
30.10.2023	rec	mh

SCALE	JOB NO.
1:50@A3	2021032

DRAWING NO.	REVISION
62	-

PLANNING