NOTES

New interior screen proposal developed by Moulding, R.Moulding & Co. (Salisbury) Ltd.

All Dimensions that are shown on this drawing are indicative and therefore to be checked and confirmed prior to manufacturing.

Do Not Scale If In Doubt Ask.

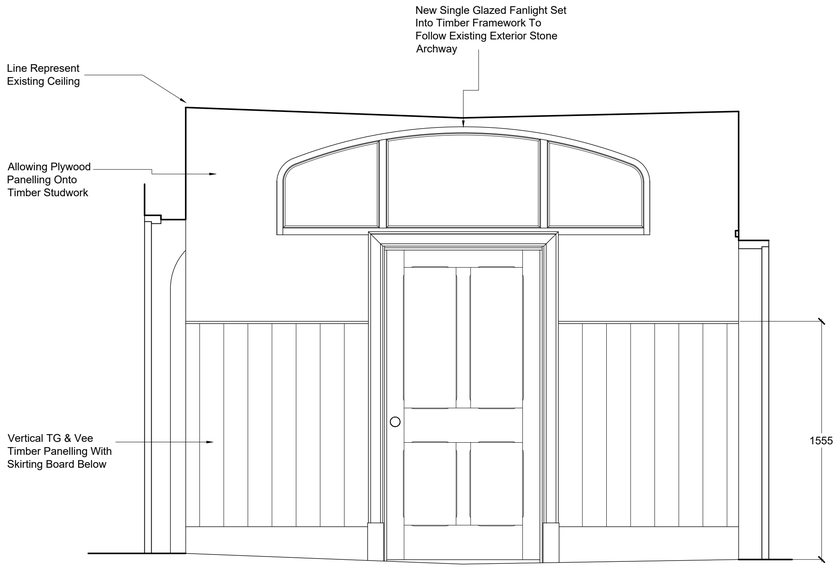

2 / 2600 NEW INTERIOR SCREEN - SECTION A
1:20



3 / 2600 NEW INTERIOR SCREEN - EXTERIOR ELEVATION
1:20

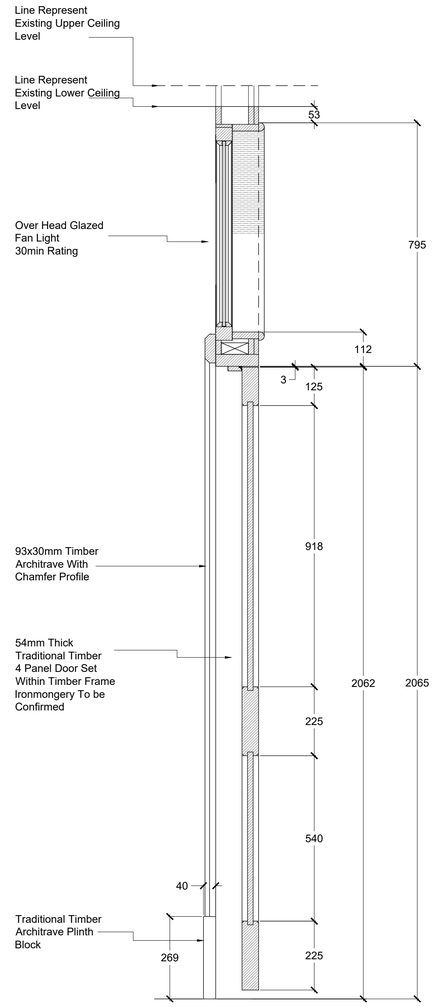

4 / 2600 SECTION B
1:10

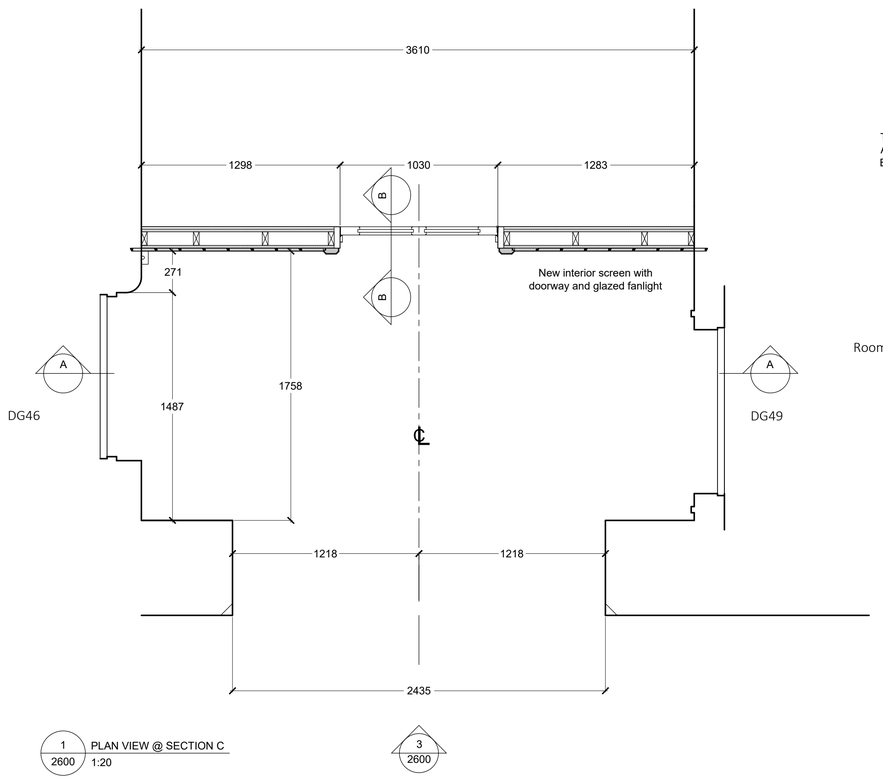

1 / 2600 PLAN VIEW @ SECTION C
1:20

3 / 2600

0 200 400 1000
Scale 1:20 mm

Purpose of Issue:
FOR_PLANNING

Notes

1. Any dwg format drawing is to be read in conjunction with and at the scale of the accompanying pdf.
2. Where colours other than black or grey are used, the drawing must be plotted in colour.
3. For status 'C' (Construction) drawings all dimensions are to be checked on site by the contractor, scaling is for Local Authority purposes only.
4. Unless otherwise indicated, all dimensions are in millimeters.
5. All information on this drawing is to be read in conjunction with the relevant Donald Insall Associates specification and trade contractors' drawings and information by specialists.
6. In the event of any discrepancy, please contact us immediately.
7. This drawing may contain survey information by others and is to be used solely for the purposes for which it was issued.
8. These are uncontrolled documents issued for information purposes only. If you have any queries regarding the drawings, please contact DIA immediately.
9. Please note DIA cannot be held responsible for any errors arising from changes made to an uncontrolled dwg file.

© 2019 DONALD INSALL ASSOCIATES LTD

Drawing Status

F	Feasibility	**B**	Building Control	**T**	Tender
S	Sketch Design	**D**	Developed Design	**C**	Construction
P	Planning	**M**	Measurement	**R**	Record

Rev	Date	Dwn	Auth	Revision
0	30-11-22	SXD	LSB	Initial Issue

STOCKTON HOUSE STABLES

New Interior Screen

Project	No
STOCK.S	2600

Scale (A1)	Status	Revision
1:10; 1:20	P	0

Donald Insall Associates
Chartered Architects and Historic Building Consultants

2 Queen's Parade, Bath BA1 2NJ
(+44) 01225 469 898
bath@insall-architects.co.uk