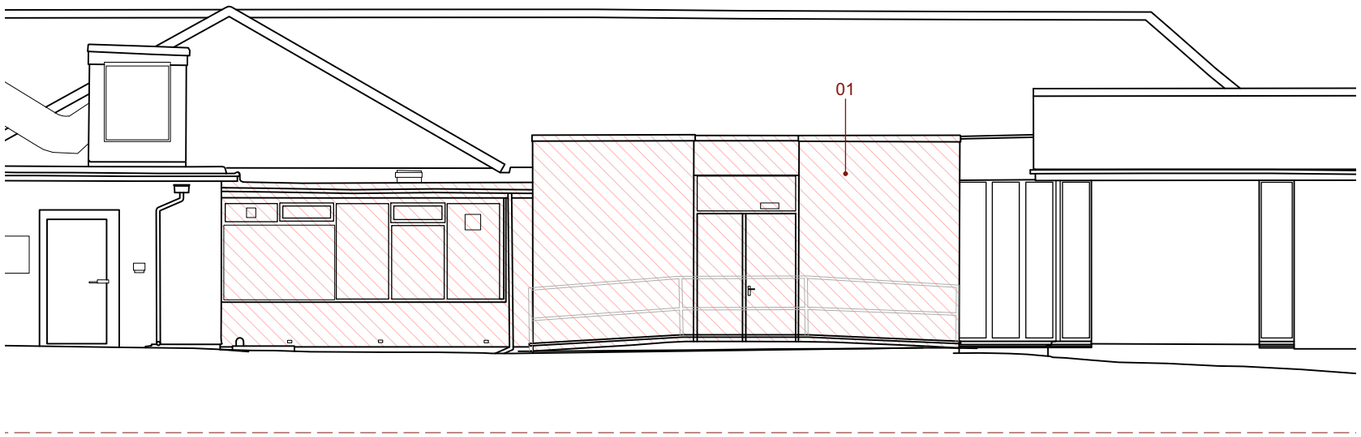


EXISTING EAST ELEVATION

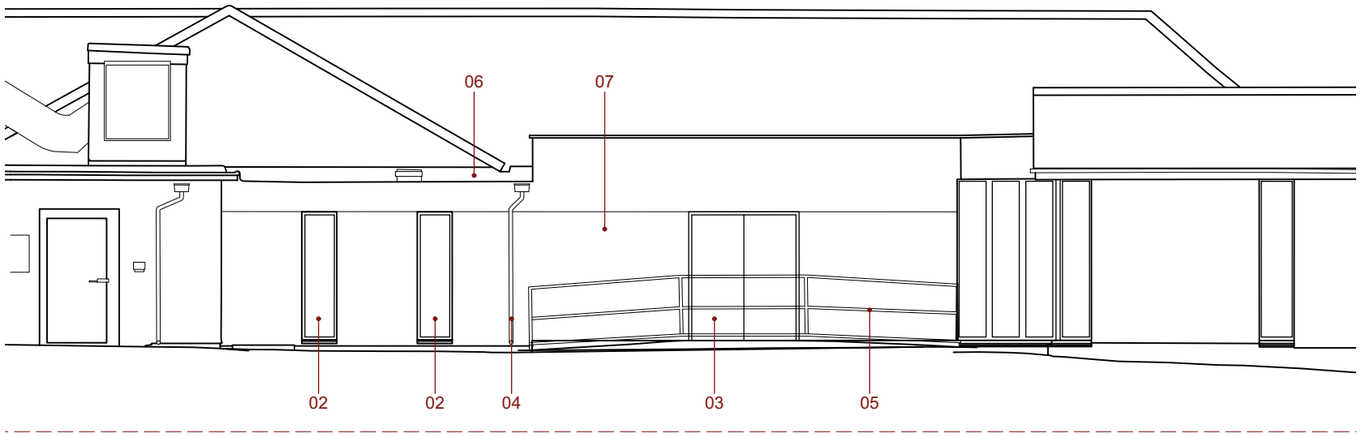


PROPOSED EAST ELEVATION

0 5 10 15M

SCALE BAR @ 1:100

NOTES

1. 1970/80's timber framed building to be demolished.

2. New external steel double glazed window to match existing window on this elevation.

3. New external steel framed doorset, to maintain means of escape.

4. New rainwater goods to replace those being removed as part of demolition works.

5. Existing ramp and railings at end of concrete slab to be retained.

6. Flat roof to be replaced.

7. New external wall to be rendered to match adjecent existing elevation to 1980's hospital extension.

Kendall Kingscott

Chartered Architects
Chartered Building Surveyors
Interior Designers
CDM Services

Windward House, Fitzroy Road
Exeter, Devon EX1 3LJ

+44 (0)1392 266 890
www.kendallkingscott.co.uk

Rev Date By Ap Note

Project
Chippenham Hospital
Physiotherapy Refurbishment

Client
NHSPS

Drawing Title
DEMOLITION WORKS
ELEVATIONS

Project Number
**220572**

Drawing Number - Revision
**1012**

| Scale | Paper Size | Filename |
|---|---|---|
| **1:100** | **A3** | |

| Date | Drawn | Checked | Status |
|---|---|---|---|
| **20/10/23** | **RB** | **PS** | **PLANNING** |

© Copyright Do not scale this drawing

Check all dimensions and levels on site

Only to be used on the site for which designed. The electronic transmission of designs/information contained in this drawing is carried out entirely at the User's risk and Kendall Kingscott Ltd. will have no liability for any errors or inaccuracies arising therefrom. The production of amended or updated information from the said designs/information by the User is entirely the responsibility of the User and Kendall Kingscott Ltd. shall have no responsibility in respect thereof whatsoever.