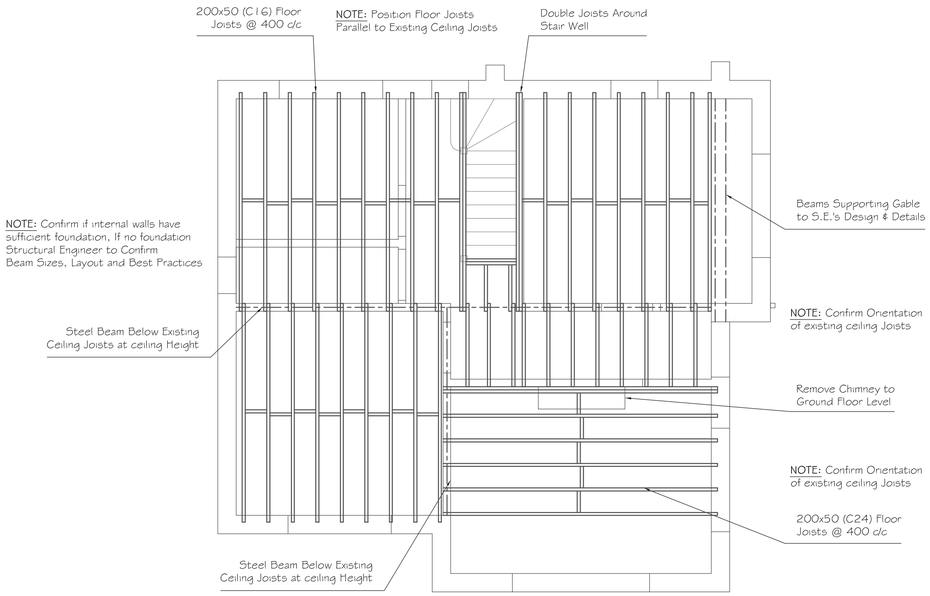

FLOOR JOIST PLAN

Scale 1:50

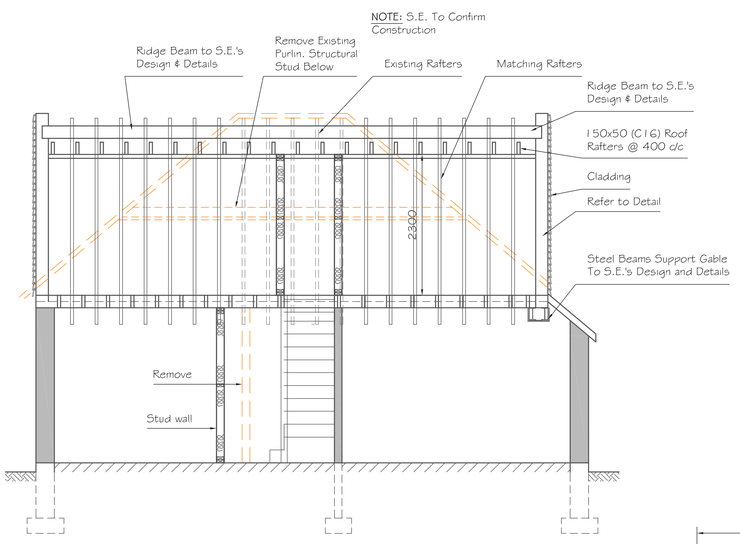

NOTE: Confirm if internal walls have sufficient foundation, If no foundation Structural Engineer to Confirm Beam Sizes, Layout and Best Practices

SECTION A-A

Scale 1:50

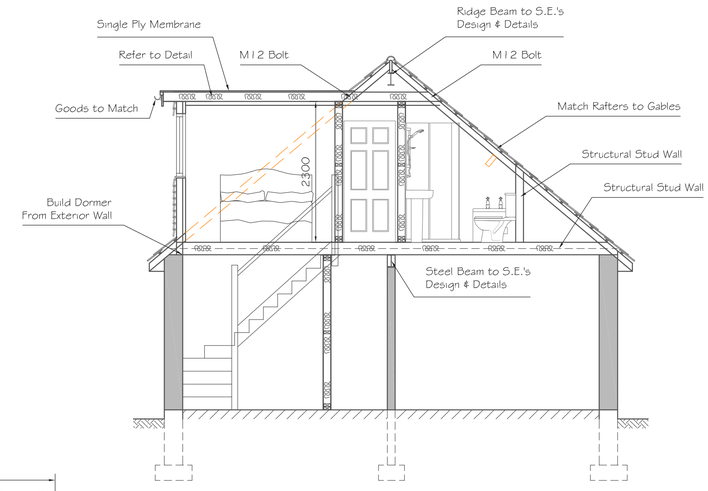

NOTE: Confirm if internal walls have sufficient foundation, If no foundation Structural Engineer to Confirm Beam Sizes, Layout and Best Practices

SECTION B-B

Scale 1:50

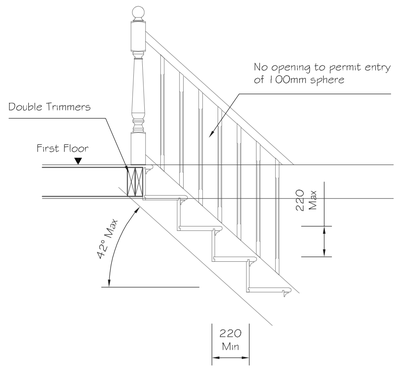

STAIR DETAIL

Scale 1:20

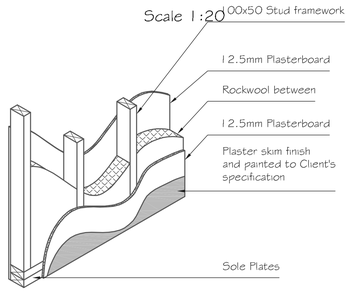

STUD WALL

Scale 1:20

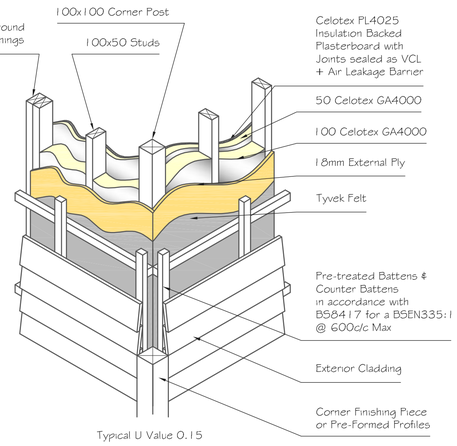

Typical U Value 0.15

DORMER CHEEK

Scale 1:20

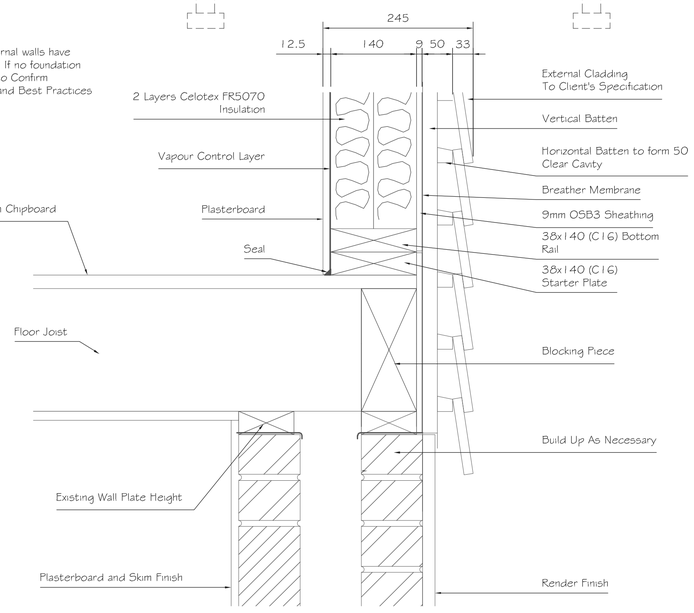

GABLE WALL CONSTRUCTION

Scale 1:10

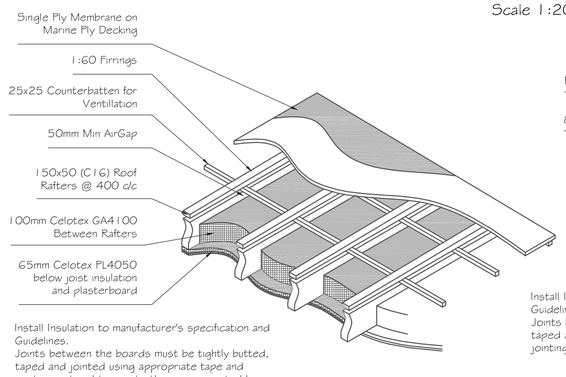

Install Insulation to manufacturer's specification and Guidelines.
Joints between the boards must be tightly butted, taped and jointed using appropriate tape and jointing material to create the vapour control layer.

Typical U Value 0.15

FLAT ROOF INSULATION

Scale 1:20

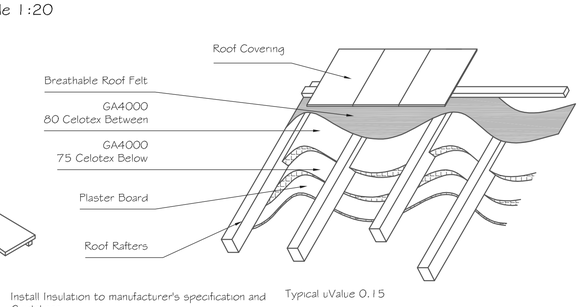

Install Insulation to manufacturer's specification and Guidelines.
Joints between the boards must be tightly butted, taped and jointed using appropriate tape and jointing material to create the vapour control layer.

Typical uValue 0.15

PITCHED ROOF INSULATION

Scale 1:20

ALL MEASUREMENTS TO BE CHECKED ON SITE.
ALL MEASUREMENTS INDICATED ARE STRUCTURAL.

Drainage
All drainage work shall comply with Part H of the Building regulations and shall be tested and approved by the Building Inspector prior to back filling of the trenches. Pipework and fittings shall be Osma by Wavin Plastics laid as directed by manufacturers site installation handbook. Ceilings with soil pipe runs should be 2 layers Plasterboard or similar fixed with staggered joints with skim finish.

Heating
Expansion of existing system by approved Heating Engineer who will commission the completed installation and issue a certificate of compliance as required by Part J of the Building regulations.

Ventilation
All ventilation to be provided in accordance with the latest edition of Building Regulations Part F:
Background ventilation provided by trickle vents to windows where ever necessary and possible.
Mechanical ventilation provided where necessary to:
Kitchen - 30l/s if adjacent to hob
60l/s elsewhere
Bathrooms - 15l/s (15mins over-run)
Utility - 30l/s

Glazing
All glazed doors & side panels to be glazed with toughened safety glazing.
All windows/ glazed screens below 800mm from floor level to be toughened safety glazing.

Electrical
Installation shall be designed and installed in full compliance with the current edition of the IEE Regulations and Part P of the Building Regulations. The completed installation shall be checked, tested and certified as compliant as specified in Part P.

Electrical
Installation shall be designed and installed in full compliance with the current edition of the IEE Regulations and Part P of the Building Regulations. The completed installation shall be checked, tested and certified as compliant as specified in Part P.

Windows
Double glazed with safety glass (B.S. 6206) 'K' glass to give 1.4W/m²K & to have 5000mm² trickle vent per frame.
Non-Habitable spaces to have 2500mm² trickle vent per frame.

External House Walls
Build up gable wall in timber frame. Structure to be confirmed by S.E.

Internal Partitions
12.5mm plasterboard each side of 75x50mm timber stud framework with 50mm Rockwool Flexi insulation between.

Windows (Escape)
Escape windows to be provided to all habitable room on first floor. Windows should have an unobstructed openable area of min. 0.33m² and at least 450x450mm route through. The bottom of openable area should not exceed 1100mm above floor level.

Staircase
220 Max Risers and 220 Min goings. Maximum pitch 42° and no opening to permit entry of 100mm sphere

Flat Roof
Single ply membrane on 22mm marine ply decking. 1:60 firrings over counterbattens to provide 50mm airgap. 150x50 (C16) roof rafters @ 400 c/c with celotex 100mm Celotex GA4100 between & 65mm Celotex PL4050 Below

1:50 [m]
0 0.5 1.0 1.5 2.0 2.5

1:100 [m]
0 1 2 3 4 5

1:500 [m]
0 5 10 15 20 25

1:1250 [m]
0 20 40 60

Alex Dawson
www.addraughting.co.uk
alex@addraughting.co.uk
01672 511412
07791 341698

59 Barrow Close
Marlborough
Wiltshire
SN8 2BE

AD DRAUGHTING
ARCHITECTURAL SERVICES

Client
MR & MRS FARSNWORTH

Job Title
EXTENSION AT:
8 GORINGE ROAD,
SALISBURY,
WILTSHIRE,
SP2 7HZ.

Drawing Title
CONSTRUCTION DETAILS

Scale: AS SHOWN

Date: 15/09/2023 | Drawn: AD

Drawing No.: 1360-03 | Rev: -

841 x 594 A1