

PROPOSED SOUTH EAST ELEVATION

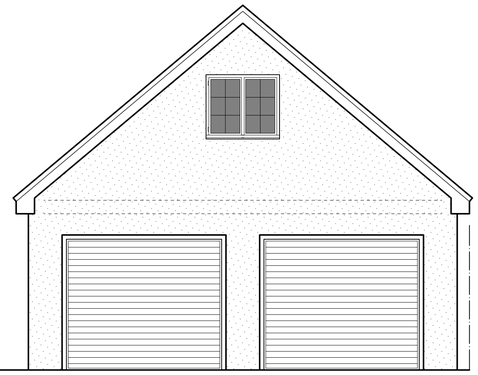

PROPOSED FRONT ELEVATION

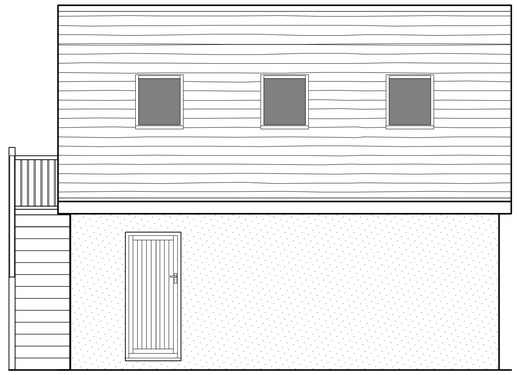

PROPOSED SIDE ELEVATION

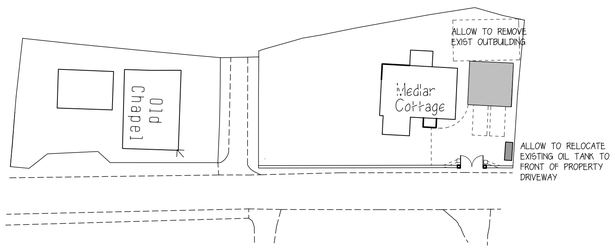

BLOCK PLAN 1:500

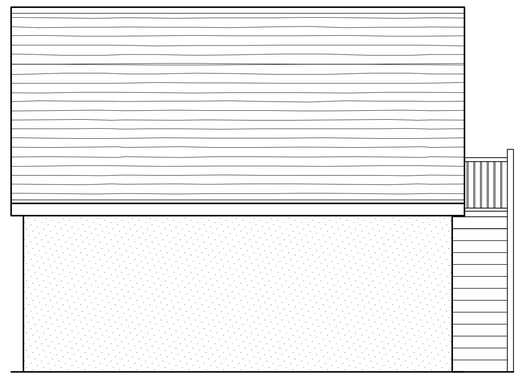

PROPOSED SIDE ELEVATION

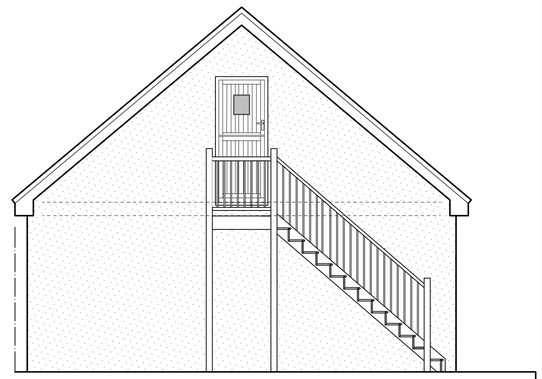

PROPOSED REAR ELEVATION

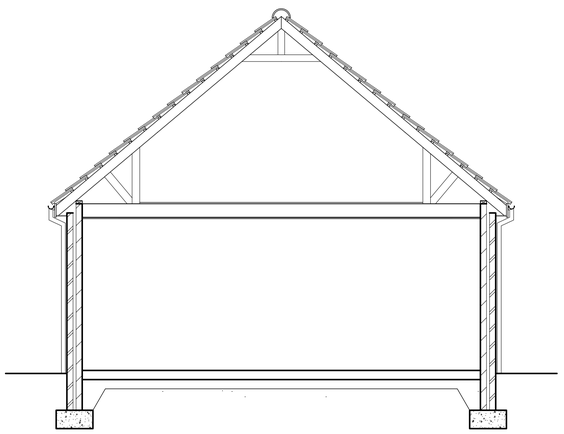

SECTION A -A

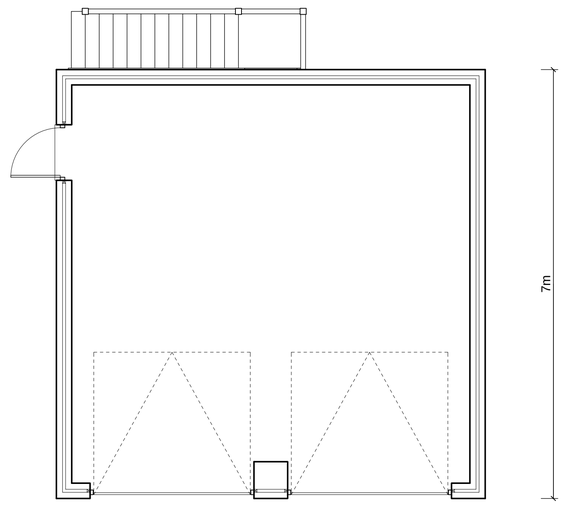

PROPOSED GROUND FLOOR LAYOUT

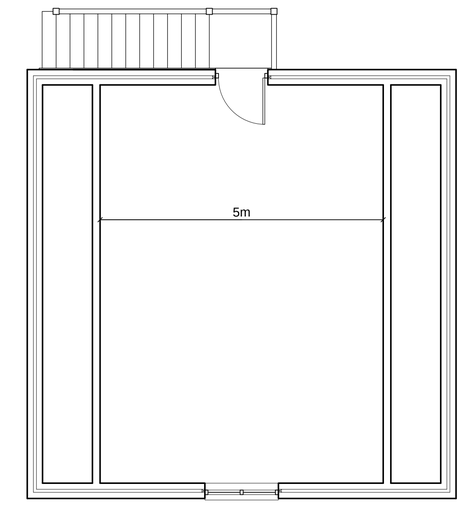

PROPOSED FIRST FLOOR LAYOUT

SCALE BAR 1:20

0 1 2 3 4 5m

SCALE BAR 1:100

0 2 4 6 8 10m

SCALE BAR 1:50

0 1 2 3 4 5m

SCALE BAR 1:500

0 10 20 30 40 50m

NOTES

Rev.	Date	Description	By	Chk	App

Client/Project
MR & MRS EDWARDS

Drawing Title
PROPOSED GARAGE WITH ROOM OVER AT MEDLAR COTTAGE BARNES GREEN BRINKWORTH

Designed	Drawn	Date	Scale
SK	SK	18 OCT 23	1:50, 1:500
CAD Reference			Size A1

Stephen Kingshott MCABE
Katie Kingshott ACABE

Stephen Kingshott Building Consultancy Ltd
54 Springdale Ave
Broadstone, Poole
Dorset BH18 9EX
Tel. 07973538931

DRAWING NUMBER	REVISION
00	

cabe chartered association of building engineers