

SJ Stephens Associates

ARBORICULTURAL, LANDSCAPE & MANAGEMENT CONSULTANTS

Savernake Barn
Stokke Common
Great Bedwyn
Marlborough
Wiltshire SN8 3LL
Tel: 01672 871 862
www.sjstephens.co.uk
e: info@sjstephens.co.uk

Arboricultural Impact Assessment

- Tree Survey
- Tree Protection Plan
- Arboricultural Method Statement

For:-

A New Dwelling

At:-

Underhill,
Church Farm Lane,
Woodborough,
Pewsey,
Wiltshire SN9 5PL

On behalf of:-

Paul Broxis
Underhill,
Church Farm Lane,
Woodborough,
Pewsey,
Wiltshire SN9 5PL

Prepared by:

Simon Stephens MA Oxon, Dip Arb(RFS), MArborA, C Env. MICFor
Email: simon@sjstephens.co.uk

Survey Date: 25th July 2023
Report Date: 16th August 2023
Project no: 2126

CONTENTS

1 BACKGROUND
2 SURVEY DETAILS AND SCOPE
3 SURVEY LIMITATIONS
4 LEGAL PROTECTION OF TREES
5 ARBORICULTURAL METHOD STATEMENT
6 ARBORICULTURAL IMPACT ASSESSMENT
7 REFERENCES

Appendices
A Tree Protection Plan: drawing no: 2126-01
B Tree Schedule
C BS 5837:2012 - Trees in relation to design, demolition and construction, Table 1
D Tree Protection Fencing Detail
E Proposed Site Plan

1 BACKGROUND

1.1 This Arboricultural Impact Assessment has been instructed by Fowler Architecture and Planning, on behalf of Paul Broxis to specify tree protection measures and assess the arboricultural impact of the proposed construction of a new dwelling in the garden of Underhill.

1.2 Trees were surveyed, with findings shown in the Tree Schedule in Appendix B and plotted on the Tree Protection Plan in Appendix A. This also shows tree protection measures, which are specified in the Arboricultural Method Statement in section 5 below. The arboricultural impact is assessed in section 6, which assumes that these measures are followed.

1.3 The tree survey was undertaken, and this report has been prepared, by Simon Stephens MA Oxon, Dip Arb (RFS), MArborA, C Env, MICFor a Registered Consultant with the Arboricultural Association, with over 20 years relevant experience.

1.4 This survey and report have been prepared in accordance with the recommendations of BS 5837:2012, Trees in relation to design, demolition and construction - Recommendations.

1.5 Documentation supplied:

- Topographical Survey

- Fowler Architecture and Planning, Proposed Site Plan: drawing no 220916-01revA

2 SURVEY DETAILS AND SCOPE

2.1 The site survey included trees and shrubs, within and immediately adjacent to the red line boundary, with a stem diameter over 75mm at 1.5m height, as shown located on the Tree Protection Plan, included as Appendix A.

2.2 Tree inspection took place from ground level with the use of binoculars, sounding hammer and metal probe using the Visual Tree Assessment method (Mattheck & Breloer 1994). The presence and condition of bark and stem wounds, cavities, decay, fungal fruiting bodies and any structural defects that could increase the risk of structural failure were noted.

2.3 Tree diameters were measured using a girthing tape and tree heights were measured using a hypsometer. Where use of a tape was restricted by site factors, diameters were estimated, with the diameter recorded in the tree schedule as eg “est 300”.

2.4 At the time of the survey, the weather was fine with no restrictions to visibility. Broadleaf trees were in leaf. There were no limitations to access around the trees within the site.

2.5 Tree details are shown on the Tree Protection Plan included as Appendix A. Tree locations have been taken from the topographical survey provided. Where not included on the topographical survey, they have been determined by measuring distances from features shown on the plan, using a laser measuring device. The following information was recorded for each tree, and is shown in the Tree Schedule included as Appendix B:

- **Number:** an identity number for each tree, prefixed with a “T”, which cross references locations shown on the plan with the schedule in Appendix B. Where a number of trees are located close together and are similar in character and management requirements, they have been treated as a Group under a single number, prefixed with a “G”.
- **Species**: common name.
- **Tree height**: approximate height in metres.
- **Stem diameter**: diameter in millimetres, taken at 1.5m above ground. Where there are a number of stems, stem diameters are recorded in the condition column.
- **Branch spread**: approximate spread in metres to N,S,E and W of the trunk. The approximate branch spread is drawn on the plan.
- **Canopy clearance**: approximate height of the canopy above ground. Where a significant, low lateral branch is present, its height and direction of growth is included in the Condition column.
- **Age class**: Young, Semi-mature, Early mature, Mature, Over-mature, Veteran.
- **Condition**: features that affect the safe useful life expectancy and amenity of the tree, including the presence of decay or any physical defect.
- **Management Recommendations**: recommendations to ensure the health and safety of the tree, within the future development.
- **Estimated Remaining Contribution**: <10 years, 5-15 years, 10-20 years, 15-30 years, 20-40 years, >40 years.

- **Category grading**: tree classification taken from BS 5837:2012, Trees in relation to design, demolition and construction (see Appendix C for details), as follows:
    - Category U: Unsuitable for retention, trees with less than 10 years life expectancy, normally recommended for removal (Red)
    - Category A: high quality trees, able to make a substantial contribution for at least 40 years, normally retained unless there is an over-riding reason for removal and appropriate mitigation. (Green)
    - Category B: moderate quality trees, able to make a significant contribution for at least 20 years, normally retained. (Blue)
    - Category B/C: an intermediate category between categories B and C (not specifically described in BS5837). Trees, which should be retained wherever possible, providing retention does not unreasonably constrain the layout. (Blue)
    - Category C: low quality, in adequate condition to remain for at least 10 years, or young trees <150mm stem diameter. Trees which can be removed to allow the desired layout or new planting. (Grey)

  For category A, B and C trees, a subcategory has been allocated, providing information on the reasons for selection of a specific category, as follows:
    - Subcategory 1: mainly arboricultural values.
    - Subcategory 2: mainly landscape values.
    - Subcategory 3: mainly cultural values, including conservation.
- Trees have been classified irrespective of the possible proximity to future construction. The BS 5837 category is colour coded, as indicated above, on the plan included as Appendix A.
- **Protection Distance:** the protection distance in metres required to provide the Root Protection Area recommended in BS 5837, assuming a circular area centred on the tree.
- **Root Protection Area (RPA):** the area in m^2, as recommended in BS 5837, to provide sufficient rooting area to ensure tree survival and which, in most situations, should be fenced off to prevent root damage from construction activities.

3 SURVEY LIMITATIONS

3.1 No internal decay devices, or other invasive tools to assess tree condition, were used.

3.2 No soil excavation or root inspection was carried out.

3.3 This survey has not considered the effect that trees or vegetation may have on the structural integrity of future building through subsidence or heave.

3.4 The tree survey has been undertaken for planning purposes. Although any obvious structural defects have been noted, a Tree Hazard Assessment has not been carried out. Mature trees close to highly populated areas or public highways should normally be checked for safety annually, by a suitably qualified person.

4 LEGAL PROTECTION OF TREES

4.1 The Wiltshire Council website was viewed on 28-07-2023, showing that the site falls within a Conservation Area. The presence of Planning Conditions currently attached to the site, was not checked.

4.2 Since the site is covered by a Conservation Area, six weeks notification must be given to the Local Planning Authority of any intended tree surgery works, to allow them the option of placing a Tree Preservation Order.

4.3 Once planning permission has been granted, provided the application clearly shows any trees to be removed or pruned, this overrides protection provided by Tree Preservation Orders or Conservation Areas, provided the work is necessary to implement the approved development. If not essential, a separate tree work application will need to be submitted for trees protected by a Tree Preservation Order.

5 ARBORICULTURAL METHOD STATEMENT

5.1 Site Overview

5.1.1 The proposal is for the construction of a new dwelling in the garden of Underhill. The proposed site plan is included as Appendix E and the footprint of proposed new building and hard surfacing has been added to the survey drawing, along with tree details, to create the Tree Protection Plan attached as Appendix A.

5.1.2 There are oak, beech and lime trees growing around the perimeter of the site with a number of apple trees within the garden.

5.2 Tree Work

5.2.1 Details of proposed tree works are included in the Tree Schedule included as Appendix B.

5.2.2 16 trees and one group are proposed for removal, as detailed in section 6.1 below.

5.2.3 All tree work must be undertaken to the standards set out in BS 3998:2010 Tree work – Recommendations.

5.3 Root Protection Areas

5.3.1 Root Protection Areas are shown for all trees in the tree schedule included as Appendix B. They are also shown for all retained trees, as circular areas centred on the trunk, on the Tree Protection Plan included as Appendix A. Where there are physical obstructions to root growth the Root Protection Area should be shown as an equivalent area that is more likely to reflect actual root growth. The Root Protection Area shows the area around a tree in which all construction activity must normally be excluded, unless appropriate protection measures are implemented.

5.3.2 For tree number T31, where the road within the Root Protection Area will have inhibited root growth, the Root Protection Area has been offset by 20% away from the road, to more closely reflect the likely actual root spread

5.4 Tree Protection Fencing

5.4.1 Tree Protection Fencing must be erected where shown on the Tree Protection Plan, included as Appendix A. This will provide full protection of the Root Protection Areas of all retained trees within the site, other than for areas hatched/shaded cyan on the Tree Protection Plan, indicating Ground Protection Areas, where roots must be protected, as described in section 5.6 below.

5.4.2 Tree works can be completed before Tree Protection Fencing is erected, however no contractors plant or vehicles must be allowed to track within the Root Protection Areas unless ground protection panels are laid.

5.4.3 Tree Protection Fencing must be from weldmesh panels, at least 2m high, securely fixed, with wire or scaffold clamps, to a rigid framework. This framework must be constructed from scaffold tubes with vertical tubes, at a maximum interval of 3m and driven into the ground at least 0.6m. The structure must be well braced to resist impacts, constructed as per Figure 2 of BS5837:2012, which is reproduced in Appendix D. Alternatively, weldmesh panels can be supported on blocks, providing the blocks are pinned to the ground with road pins, or similar, and the panels are braced, as per Figure 3 of BS5837:2012, which is also reproduced in Appendix D.

5.4.4 Tree Protection Fencing must be maintained and retained for the duration of the works, or until such time as agreed in writing with the Local Planning Authority.

5.4.5 Weatherproof notices must be fixed to the Tree Protection Fencing, and maintained, stating:-

TREE PROTECTION AREA
KEEP OUT
TREES ENCLOSED BY THIS FENCE ARE PROTECTED BY PLANNING CONDITIONS AND CONSERVATION AREA STATUS
CONTRAVENTION MAY LEAD TO CRIMINAL PROSECUTION
THE FOLLOWING MUST BE OBSERVED BY ALL PERSONS:

- The Protection Fence must not be moved
- No person or machine must enter the area
- No materials or spoil must be deposited
- No excavation must be permitted

ANY INCURSION INTO THE PROTECTED AREA MUST BE WITH THE WRITTEN PERMISSION OF THE LOCAL PLANNING AUTHORITY

5.5 Ground Protection Areas

5.5.1 The Ground Protection Area, which is hatched cyan on the Tree Protection Plan, contains hard surfacing which is protecting any underlying roots and which must stay in place during the construction period unless further protection measures are implemented.

5.5.2 The Ground Protection Area which is shaded cyan on the Tree Protection Plan, contains a soft area where ground protection must be laid to protect any underlying roots. Trakmats, as supplied by either the Marwood Group, (www.marwoodgroup.co.uk) or Ground-Guards, (www.ground-guards.co.uk) or a similar approved product, must be used, laid on a compressible layer of sand or woodchips, laid onto a geotextile, with adjacent panels held together with connectors.

5.5.3 Ground protection must be laid before any construction starts on site and must be maintained in good condition until all construction operations have been completed. Ground protection must be fit for purpose and be replaced with an alternative product if panels start to move or any sign of ground compaction is seen.

5.5.4 An excavator must only be used for the removal of the existing hard surfacing within the Root Protection Area of T28, if it can work only from areas of hard standing, or from outside the Root Protection Area. A banksman must be present during this operation and excavation must go no deeper than the existing base course and must cease immediately if roots are found. Once hard surfacing has been removed, the area must immediately be topsoiled using good quality topsoil supplied to BS3882:2015.

5.6 General measures

5.6.1 No construction activity whatsoever, including routing of underground services, storage of materials or on-site parking, must be allowed within Root Protection Areas, other than that specifically described above.

5.6.2 No mixing or storage of cement, concrete, oil, fuel, bitumen or other chemicals must be permitted within 10m of the trunk of any retained trees, nor in any position where the slope of the ground could lead to contamination of the Root Protection Area.

5.6.3 Fires must not be lit in a position where their flames could extend to within 10m of foliage, branches or trunk.

5.6.4 Landscape works carried out within Root Protection Areas must be undertaken with great care so as not to damage shallow roots. Tractor mounted rotovators or other heavy mechanical cultivation must not be used within the Root Protection Areas.

5.6.5 If any tree shown for retention is removed, uprooted or destroyed, another tree must be planted in the same location, at a size and species to be agreed in writing with the Local Planning Authority.

5.6.6 A copy of this report and the Tree Protection Plan must be kept on site and must be fully understood by the Site Agent.

5.7 Bat roosts

5.7.1 The current legislation makes it a criminal offence to disturb, damage or destroy any bat roost or hibernation area. Contractors must be reminded of their responsibilities and should contact the relevant authorities if any signs of bats are found.

5.8 Birds

5.8.1 The current legislation makes it a criminal offence to disturb nesting birds. The nesting season is generally assumed to be from 1st March to 31st July, however this can vary depending on species and location. During these months a careful inspection must be made before work commences and works must be postponed if active nests are found.

5.9 Arboricultural Supervision

5.9.1 A qualified Arboricultural Consultant must be retained during the period of construction to carry out the following:

- to liaise with the contractor, prior to construction or demolition starting on site, to ensure this Arboricultural Method Statement is fully understood and can be complied with in full. If any revisions are required, a revised Arboricultural Method Statement must be approved by the Local Planning Authority, prior to construction or demolition starting on site.

- as necessary, to advise on any issues at the request of the local planning authority, the developer, architect or contractor.

The details of any site visit must be recorded, with copies circulated to the contractor and developer within three working days of the visit. The copies will thereafter be made available for inspection by the local planning authority if requested.

6 ARBORICULTURAL IMPACT ASSESSMENT

6.1 The following trees / tree groups, categorized as per BS 5837 (see Appendix C for details), are proposed for removal:

- Category U – unsuitable for retention: 4 trees – T19, T20, T21 and T24.
- Category C – low quality: 6 trees – T7, T10, T11, T15, T17 and T18.
- Category B/C – between categories B and C: 3 trees – T4, T5 and T8 and one group -G6.
- Category B – moderate quality: 3 trees
    - T9 – an 18.5m mature beech growing at the top of a steep bank at the drive entrance and overhanging the lane.
    - T12 – a 15m early mature copper beech
    - T14 – a 16.5m sycamore growing at the top of a steep slope above the lane.

6.2 Removal of trees alongside the lane will allow more light into the site and allow the planting of a new beech hedge along the frontage.

6.3 Although preservation of Root Protection Areas is deemed to protect tree roots, in some cases buildings may need to be set further back to ensure the future sustainability of trees. If buildings are too close to trees, future occupiers may be likely to seek the reduction, or removal of trees, if they are cutting out excessive sunlight or providing a claustrophobic or threatening environment.

6.4 Section 5.2.2 of BS 5837:2012 states that "an indication of potential direct obstruction of sunlight can be illustrated by plotting a segment with a radius from the centre of the stem equal to the height of the tree, drawn from due North West to due East, indicating the shadow pattern through the main part of the day." Shading patterns for key trees have been shown on the plan. This shows that the new dwelling is outside potential shading areas.

7 REFERENCES

- *BS5837:2012 Trees in relation to design, demolition and construction – Recommendations.*
- *BS3998:2010 Tree Work. Recommendations.*
- *Common sense risk management of trees (FCMS024). Published by the National Tree Safety Group (www.ntsgroup.org.uk)*

BS 5837: TREE CATEGORY GUIDE

Category U: Unsuitable for retention, trees with less than 10 years life expectancy.

Category A: high quality trees, able to make a substantial contribution for at least 40 years, normally retained unless there is an over-riding reason for removal and appropriate mitigation.

Category B: moderate quality trees, able to make a significant contribution for at least 20 years, normally retained.

Category B/C: an intermediate category between categories B and C (not specifically described in BS5837). Trees, which should be retained wherever possible, providing retention does not significantly constrain the layout.

Category C: low quality, in adequate condition to remain for at least 10 years, or young trees <150mm stem diameter. Trees which can be removed to allow the desired layout or new planting.

BS58837 Shade Area - area in which shading of living accommodation may affect sustainability of trees. Keep living accommodation out of these areas.

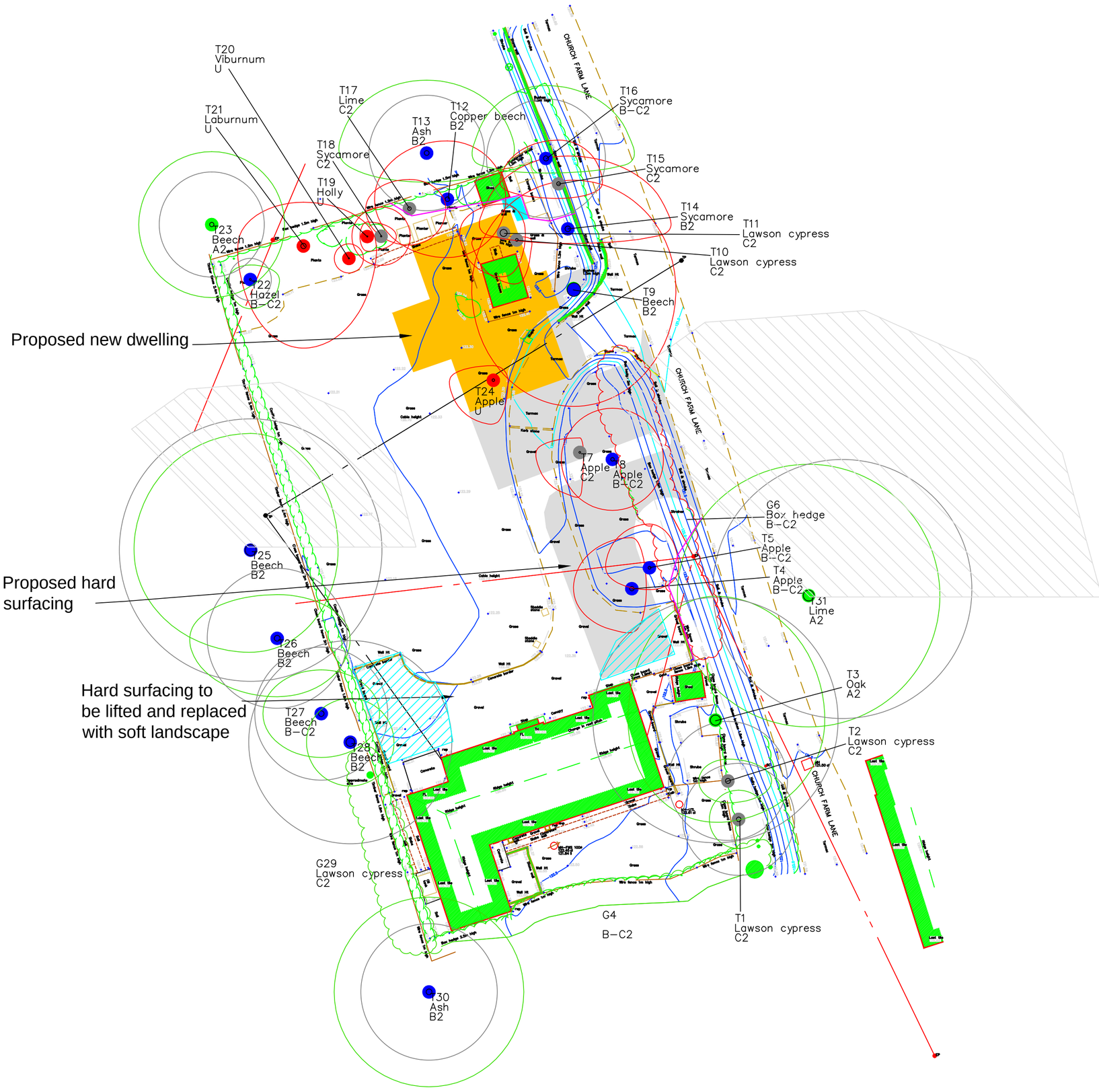

Key

- Category U
- Category A
- Category B
- Category C
- Crown spread: retained trees
- Trees For Removal
- Root Protection Area
- Tree Protection Fence
- Ground Protection Area -existing hard areas
- Ground Protection Area -existing hard areas
- BS 5837 Shade Area

N

W E

S

Scale

0 5m 10m

SJ Stephens Associates
Savernake Barn, Stokke Common
Great Bedwyn
Marlborough
Wiltshire SN8 3LL
01672 871862
www.sjstephens.co.uk

JOB TITLE
UNDERHILL
WOODBOROUGH

DRAWING TITLE
TREE PROTECTION PLAN

DRAWING NUMBER	REV
2126–01	

REVISIONS

SCALE	DATE	DRAWN BY
1:200 at A1	AUG 23	sjss

Tree/ Group No.	Species	Height (m)	Stem Diam. at 1.5m (mm)	Branch Spread (m)				Canopy Cleara -nce (m)	Age Class	Observations	Management Recommendations	Estimated Remaining Contribution (years)	BS 5837 Category Grading	Protect -ion Distnce (m)	Root Protect. Area (m2)
				N	S	E	W								
T1	Lawson cypress	12.5	320	2	2	2	2	1.2	Early mature	Bifurcates at 6m. Some minor dieback.		10-20	C2	3.8	46
T2	Lawson cypress	8	340	1.5	1.5	3	2	1.0	Early mature	Growing just outside site. Top missing. Dense ivy.		5-15	C2	4.1	52
T3	Oak	13.5	est 700	8.5	7	7.5	6	3.0	Mature	Growing just outside site. Oversailing bungalow. Crown reduced in past.		>40	A2	8.4	222
G4	Box hedge	2	25 - 50					0	Early mature	Dense evergreen hedge.		20-40	B-C2	0.6	1
T4	Apple	6.5	290	3.5	3	1	4	1.6	Mature	Bifurcates at 1m. Leaning to west.	Remove for new access.	15-30	B-C2	3.5	38
T5	Apple	6.5	200	3	1.5	2	3	1.1	Mature	Good vigour. Drawn up.	Remove for new access.	15-30	B-C2	2.4	18
G6	Box hedge	1.2 - 2	25 - 50					0	Early mature	Generally good vigour, but dead patches at southern end.	Remove for new access and to allow new hedge planting.	20-40	B-C2	0.6	1
T7	Apple	2	120	1	3	0	3	0.6	Early mature	Acute lean to west, but heavy cropping.	Remove for new access.	10-20	C2	1.4	7
T8	Apple	5	250	3.5	3.5	3.5	3.5	1.6	Mature	Bifurcates at 1m. Minor deadwood but good overall vigour.	Remove for new access.	15-30	B-C2	3.0	28
T9	Beech	18.5	920	7.5	8	7	7	0.6	Mature	6 stems from 1.9m, growing round each other. Growing on steep bank at edge of drive entrance. Awkward structure. Some minor thinning of foliage at branch extremeties.	Remove to facilitate development	20-40	B2	11.0	383
T10	Lawson cypress	8	200	0	3	1	3	1.6	Mature	Low quality.	Remove to facilitate development	5-15	C2	2.4	18
T11	Lawson cypress	9.5	480	2	3	1.5	3	1.5	Mature	Majority dead.	Remove to facilitate development	5-15	C2	5.8	104
T12	Copper beech	15	310	4	4	4	5	2	Early mature	Good potential.	Remove to facilitate development	>40	B2	3.7	43
T13	Ash	15.5	est 330	5	2	6	6	5	Early mature	Growing in adjacent site - base not inspected. Reasonable vigour at present, but susceptible to disease.		15-30	B2	4.0	49
T14	Sycamore	16.5	380	5	1	7	6	5	Early mature	Awkward structure. Growing at top of steep slope down to road.	Remove to facilitate development and allow new hedge planting	20-40	B2	4.6	65

Tree/ Group No.	Species	Height (m)	Stem Diam. at 1.5m (mm)	Branch Spread (m)				Canopy Cleara -nce (m)	Age Class	Observations	Management Recommendations	Estimated Remaining Contribution (years)	BS 5837 Category Grading	Protect -ion Distnce (m)	Root Protect. Area (m2)
				N	S	E	W								
T15	Sycamore	14	270	3	1	3	4	1.8	Early mature	Twin stems from base - 180 and 200mm. Dense ivy.	Remove to facilitate development and allow new hedge planting	10-20	C2	3.2	33
T16	Sycamore	16.5	340	5	1	6	5	1.8	Early mature	3 stems - 170, 190 and 230mm. Dense ivy. Dieback.		15-30	B-C2	4.1	52
T17	Lime	2.5	240	2	2.5	2.5	3	1	Semi Mature	Previously topped at 1.8m.	Remove	10-20	C2	2.9	26
T18	Sycamore	8.5	100	2	2	2	2	1.6	Semi Mature	Good potential.	Remove	>40	C2	1.2	5
T19	Holly	3	80	1	1	2	0.5	0	Semi Mature	Leaning. Low quality.	Remove	<10	U	1.0	3
T20	Viburnum	1.8	75	1	1	1	1	0.7	Dead		Remove	<10	U	0.9	3
T21	Laburnum	6	370	3	7	5	4.5	1.6	Mature	8 stems from base - avg 130mm - majority dead.	Remove	<10	U	4.4	62
T22	Hazel	3.5	120	1	2	2	1.5	1.2	Early mature	4 stems from base - avg 60mm.		15-30	B-C2	1.4	7
T23	Beech	16	est 300	5	5	5	5	6	Early mature	Growing in adjacent site.		>40	A2	3.6	41
T24	Apple	3	170	1	3	1	3	1.6	Early mature	Dead.	Remove.	<10	U	2.0	13
T25	Beech	11.5	est 750	8	7	6	8	2.8	Mature	Growing in adjacent site - base not inspected. Previously topped.		>40	B2	9.0	254
T26	Beech	16	est 400	3	4	5	6	2.5	Early mature	Growing in adjacent site - base not inspected. Previously topped.		20-40	B2	4.8	72
T27	Beech	16	est 380	3	3	4	4	3	Early mature	Drawn up. Previously topped.		15-30	B-C2	4.6	65
T28	Beech	16	est 580	3	3	3	3	1.7	Early mature	Growing in adjacent site - base not inspected. Previously topped.		20-40	B2	7.0	152
G29	Lawson cypress	4.5	200 - 300					1.2	Early mature	Previously topped. Some dieback. Some laurel, holly and ivy.		10-20	C2	3.6	41
T30	Ash	17	est 390	6.5	6.5	6.5	6.5	3	Early mature	Growing in adjacent site - base not inspected. Reasonable vigour at present, but susceptible to disease.		15-30	B2	4.7	69
T31	Lime	20	est 740	9	9	9	9	2	Mature	Growing on other side of lane. Dense canopy.		>40	A2	8.9	248

BS 5837:2012, Table 1 Cascade chart for tree quality assessment

Category and definition	Criteria (including subcategories where appropriate)			Identification on plan
Trees unsuitable for retention (see Note)				
Category U Those in such a condition that they cannot realistically be retained as living trees in the context of the current land use for longer than 10 years	• Trees that have a serious, irremediable, structural defect, such that their early loss is expected due to collapse, including those that will become unviable after removal of other category U trees (e.g. where, for whatever reason, the loss of companion shelter cannot be mitigated by pruning) • Trees that are dead or are showing signs of significant, immediate, and irreversible overall decline • Trees infected with pathogens of significance to the health and/or safety of other trees nearby, or very low quality trees suppressing adjacent trees of better quality *NOTE Category U trees can have existing or potential conservation value which it might be desirable to preserve; see **4.5.7**.*			See Table 2
	1 Mainly arboricultural qualities	**2 Mainly landscape qualities**	**3 Mainly cultural values, including conservation**	
Trees to be considered for retention				
Category A **Trees of high quality** with an estimated remaining life expectancy of at least 40 years	Trees that are particularly good examples of their species, especially if rare or unusual; or those that are essential components of groups or formal or semi-formal arboricultural features (e.g. the dominant and/or principal trees within an avenue)	Trees, groups or woodlands of particular visual importance as arboricultural and/or landscape features	Trees, groups or woodlands of significant conservation, historical, commemorative or other value (e.g. veteran trees or wood-pasture)	See Table 2
Category B **Trees of moderate quality** with an estimated remaining life expectancy of at least 20 years	Trees that might be included in category A, but are downgraded because of impaired condition (e.g. presence of significant though remediable defects, including unsympathetic past management and storm damage), such that they are unlikely to be suitable for retention for beyond 40 years; or trees lacking the special quality necessary to merit the category A designation	Trees present in numbers, usually growing as groups or woodlands, such that they attract a higher collective rating than they might as individuals; or trees occurring as collectives but situated so as to make little visual contribution to the wider locality	Trees with material conservation or other cultural value	See Table 2
Category C **Trees of low quality** with an estimated remaining life expectancy of at least 10 years, or young trees with a stem diameter below 150 mm	Unremarkable trees of very limited merit or such impaired condition that they do not qualify in higher categories	Trees present in groups or woodlands, but without this conferring on them significantly greater collective landscape value; and/or trees offering low or only temporary/transient landscape benefits	Trees with no material conservation or other cultural value	See Table 2

Default specification for protective barrier

Figure 2

Key

1. Standard scaffold poles
2. Heavy gauge 2 m galvanised tube and welded mesh infill panels
3. Panels secured to uprights and cross-members with wire ties
4. Ground level
5. Uprights driven into the ground until secure (minimum depth 0.6 m)
6. Standard scaffold clamps

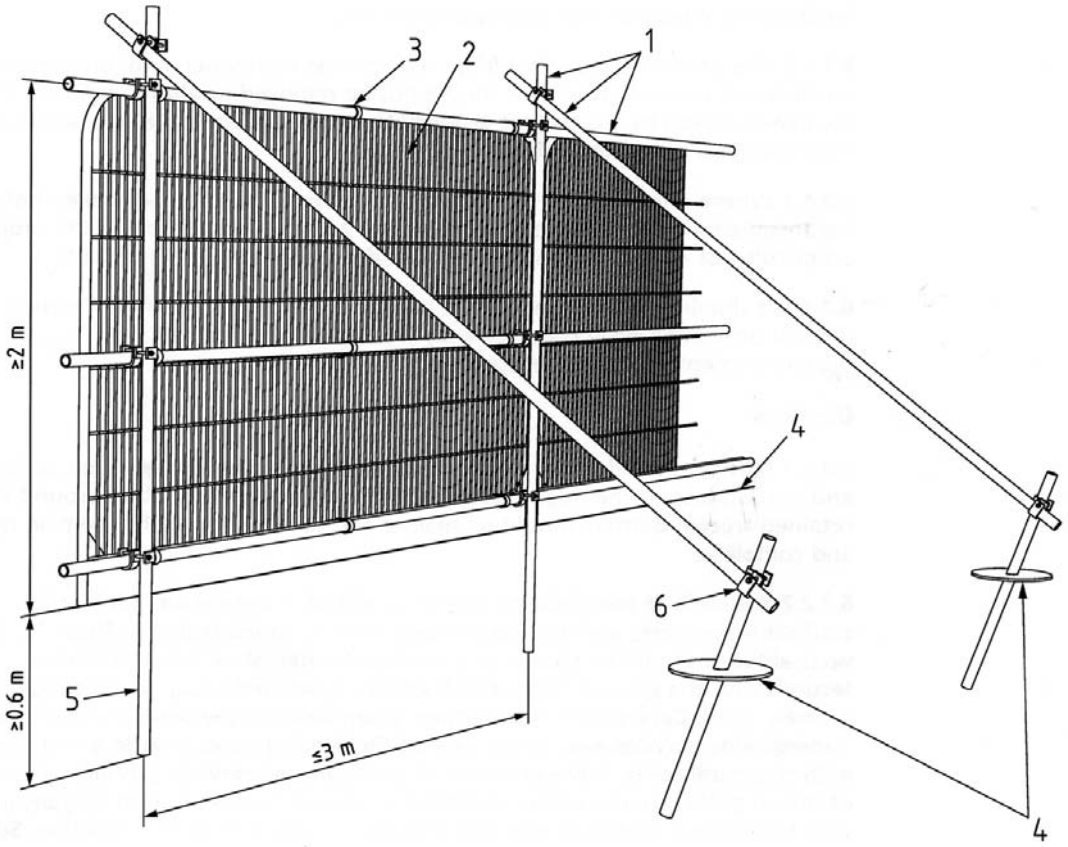

Examples of above-ground stabilising systems

Figure 3a

Stabiliser strut with base plate secured with ground pins

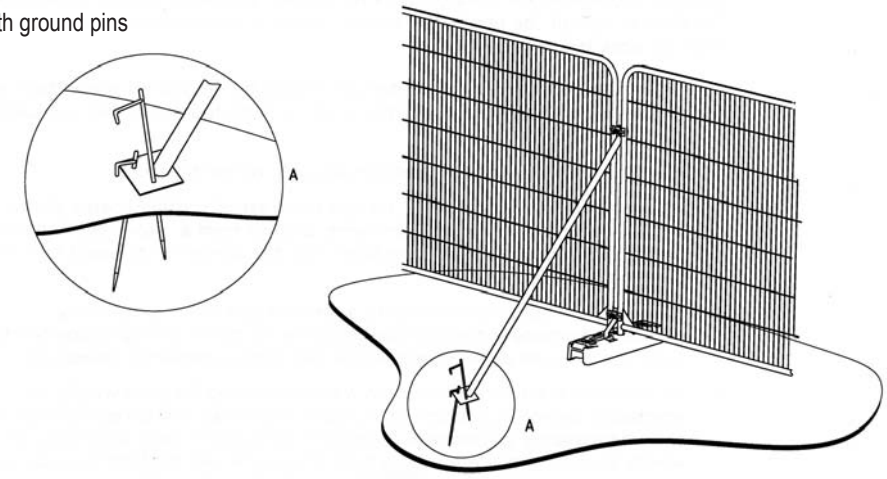

Figure 3b

Stabiliser strut mounted on block tray

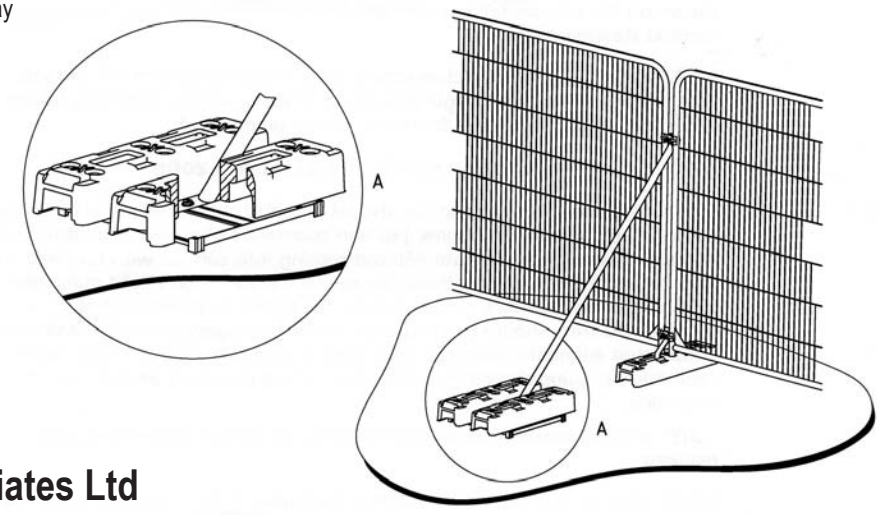

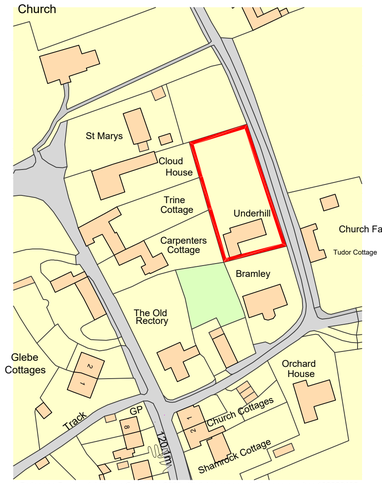

Ordnance Survey, (c) Crown Copyright 2023. All rights reserved. Licence number 100022432

LOCATION PLAN

1:1250

0m 20m 40m 60m

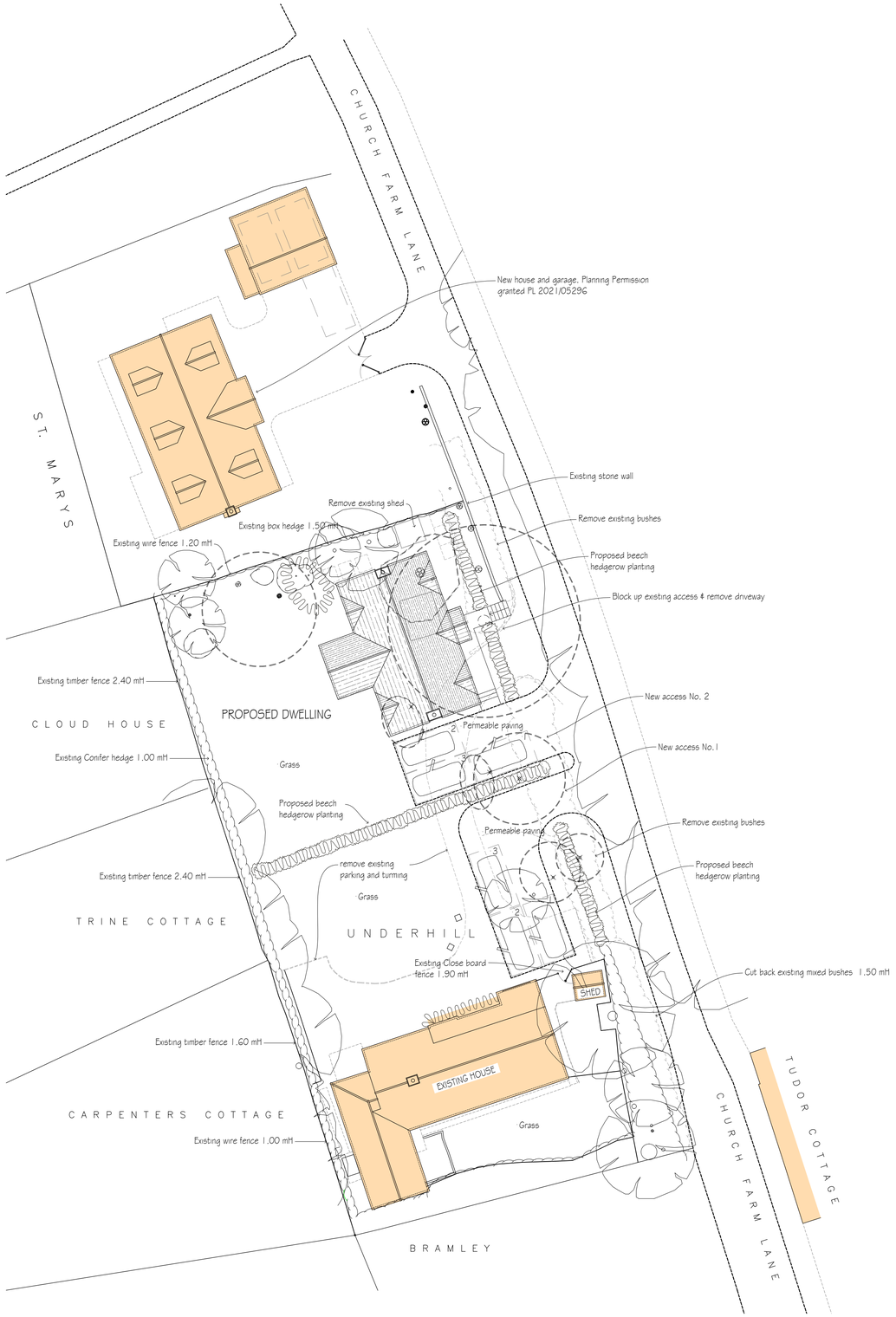

SITE PLAN

1:200

0m 5m 10m

KEY

- Existing tree
- Tree to be removed
- New hedge
- Fence
- Garden wall

revisions	initial	date
A parking revised	DB	11.08.23

Contractors, Sub Contractors and Suppliers are to check all relevant dimensions and levels of site and buildings before commencing any shop drawings or building work.

This drawing is copyright and may not be reproduced in any part of form without the written consent of Fowler Architecture and Planning

project

UNDERHILL
Woodborough

drawing

Location and Site Plan

scale	drawn by	date
1:1250, 1:200@A1	-	Jun'23

drawing no	rev
220916-01	A

FOWLER ARCHITECTURE & PLANNING
39 High Street
Pewsey
Wiltshire
SN9 5AF
tel (01672) 569444
fax (01672) 569488
enquiries@faap.co.uk