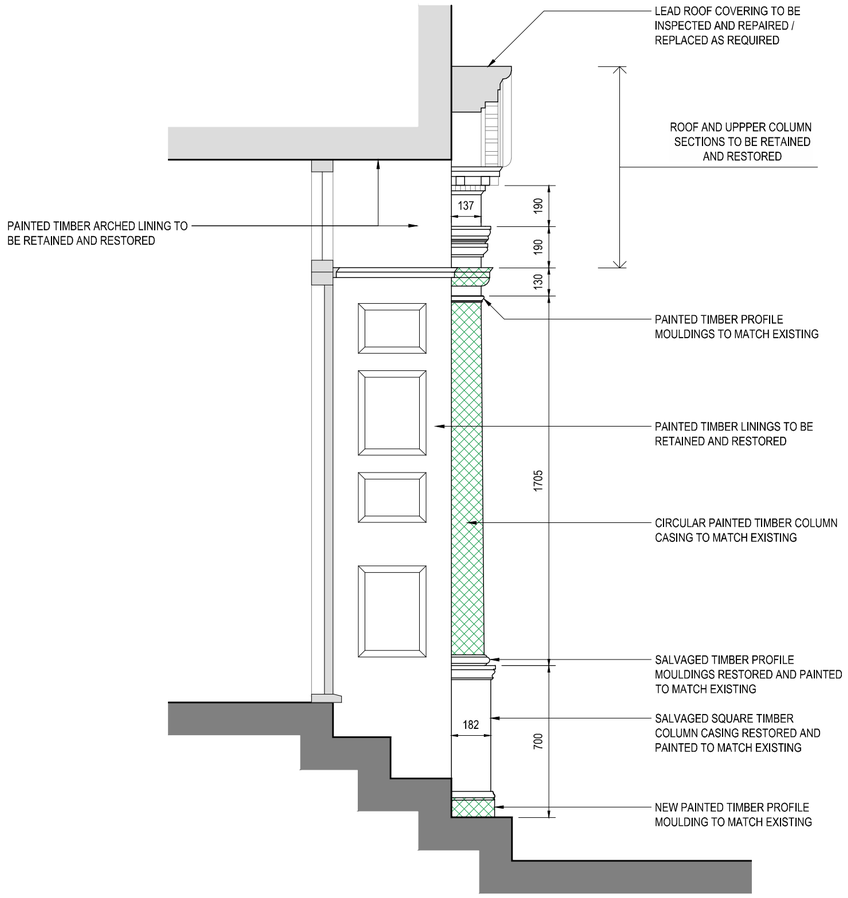

SECTION A-A SCALE 1:20

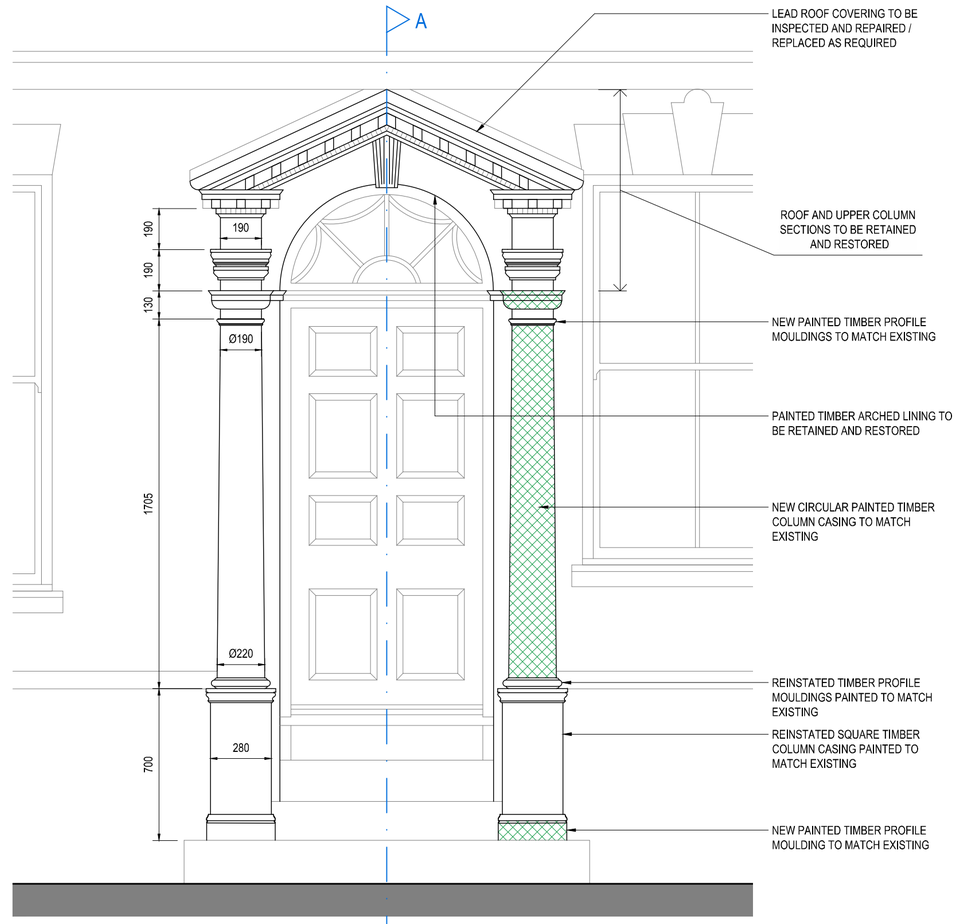

FRONT ELEVATION SCALE 1:20



FRONT ELEVATION SCALE 1:100

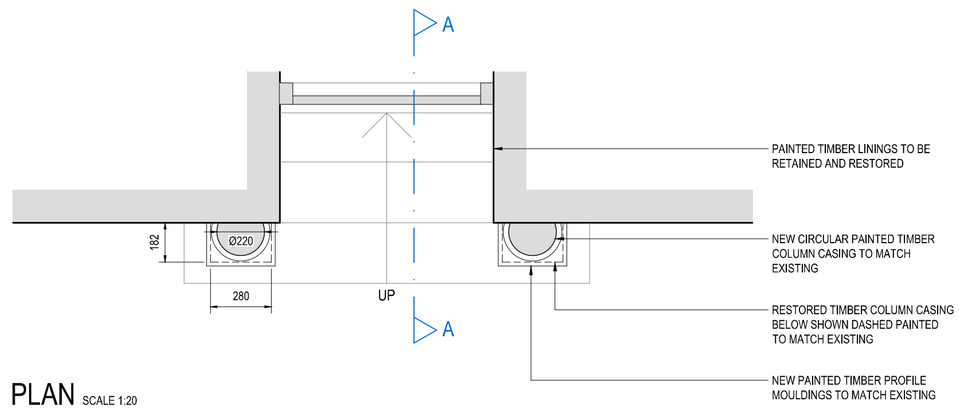

PLAN SCALE 1:20

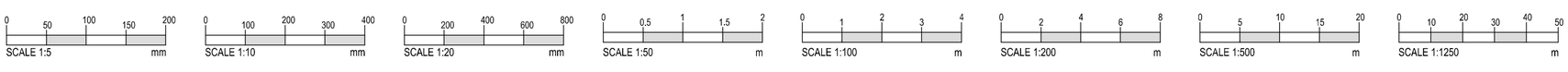

Notes:

OTHER THAN FOR THE PURPOSES OF PLANNING, DO NOT SCALE THESE DRAWINGS. USE WRITTEN DIMENSIONS ONLY. ALL DIMENSIONS TO BE CHECKED ON SITE PRIOR TO COMMENCEMENT OF WORK.

THIS DRAWING IS THE COPYRIGHT OF SIMPSON HILDER ASSOCIATES LIMITED AND MAY NOT BE REPRODUCED, COPIED OR ALTERED IN ANY WAY WITHOUT WRITTEN AUTHORITY

ITEMS CLOUDED WITH A DASHED LINE ARE TO BE CONFIRMED, SUBJECT TO DETAIL DESIGN AND CAN BE EXPECTED TO CHANGE.

REVISION CLOUD.

CROSS HATCHED AREAS TO ILLUSTRATE SECTIONS OF NEW TIMBER

Rev.	Date	Description	By	Check
*	*	*	*	*

Drawing Status

PLANNING

Client

Principal Contractor

Design Consultant

SIMPSON HILDER ASSOCIATES LIMITED
67A HIGH STREET
LYNDHURST
HAMPSHIRE
SO43 7BE
T: 023 80 283798
F: 023 80 283688
E: sha@simpsonhilder.co.uk

Project Title

BREWERY HOUSE
36 MILFORD STREET
SALISBURY
SP1 2AP

Drawing Title

ENTRANCE PORCH DETAILS
PLAN, SECTION & ELEVATIONS
PROPOSED RESTORATION

Scales (@ A2 SIZE)			Size
AS NOTED			A2
Drawn	Date	Checked	Date
PS	OCT 2023	-	-

Drawing No. 20267-102

Revision. P1