©COPYRIGHT

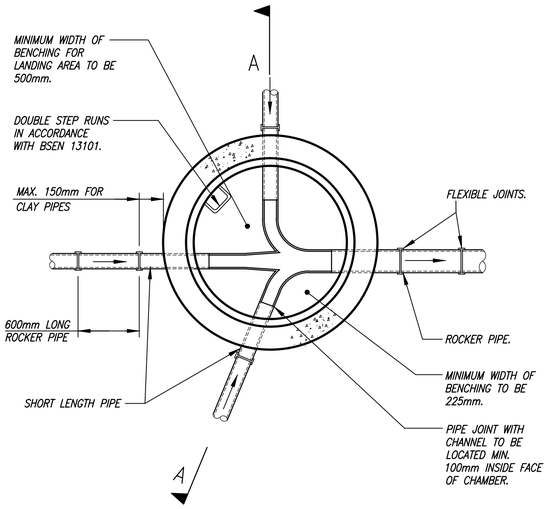

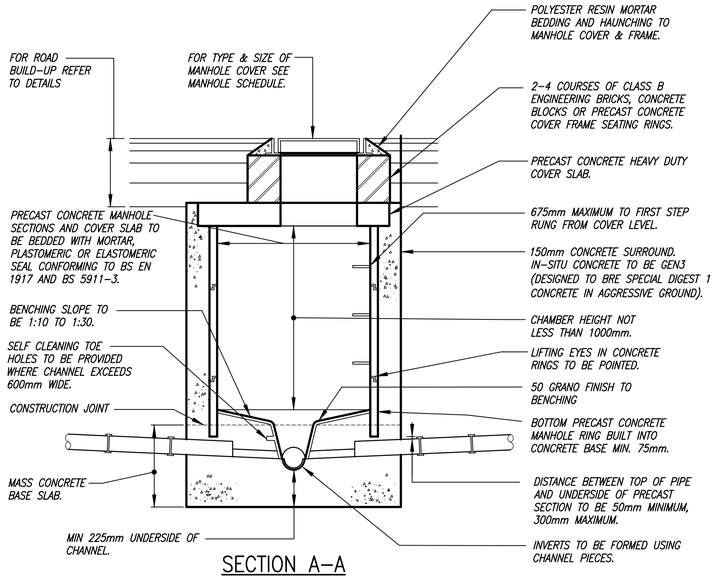

SECTION A-A

DETAIL 1: PRECAST CONCRETE MANHOLE

MAX. DEPTH FROM GROUND LEVEL TO BENCHING UP TO 3m

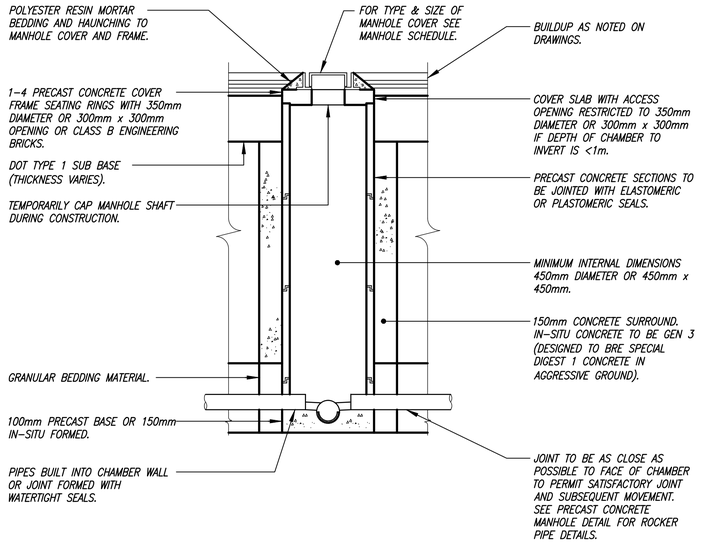

DETAIL 2: TYPICAL INSPECTION CHAMBER

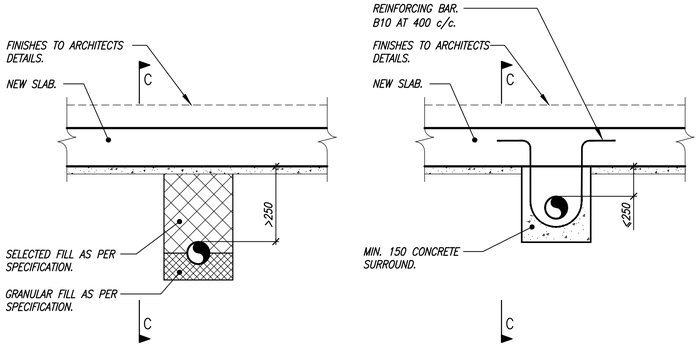

COVER FROM THE BOTTOM OF THE SLAB TO CROWN > 250 (SECTION A-A)

COVER FROM THE BOTTOM OF THE SLAB TO CROWN < 250 (SECTION B-B)

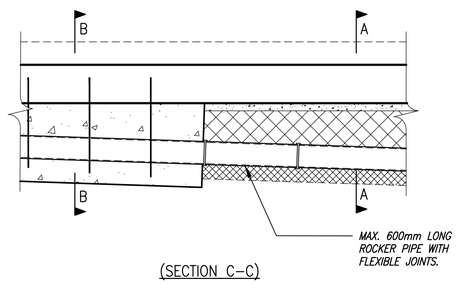

(SECTION C-C)

DETAIL 3

PIPE BEDDING DETAILS

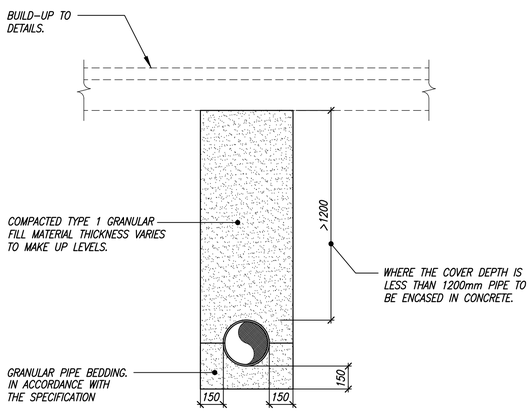

COVER DEPTH > 1.2m

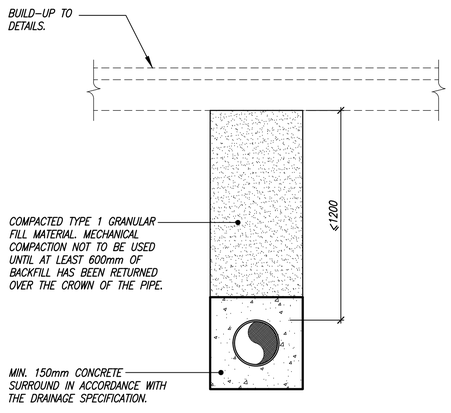

COVER DEPTH ≤ 1.2m

DETAIL 4

TYPICAL PIPE BEDDING DETAILS FOR EXTERNAL PIPEWORK

notes

1. THIS DRAWING IS TO BE READ IN CONJUNCTION WITH ALL RELEVANT ARCHITECT'S AND ENGINEER'S DRAWINGS AND THE SPECIFICATION.
2. DO NOT SCALE FROM THIS DRAWING.

CONDITION ISSUE

–	09.07.21	ISSUED FOR TENDER	MBr

job
TOTTENHAM HOUSE
THE OLD STABLES

title
TYPICAL DRAINAGE DETAILS
SHEET 1

drawn	checked
SP	MBr
date	scale (original - A1)
JULY'21	1:20

Alan Baxter

75 Cowcross Street London EC1M 6EL
tel 020 7250 1555
email aba@alanbaxter.co.uk

www.alanbaxter.co.uk

drg. no. **THB002-ABA-XX-00-DR-C-3030** rev.

Alan Baxter Ltd is a limited company registered in England and Wales, number 06603598. Registered office as above.