NOTE: Plan is for planning application submission and must not be used for construction

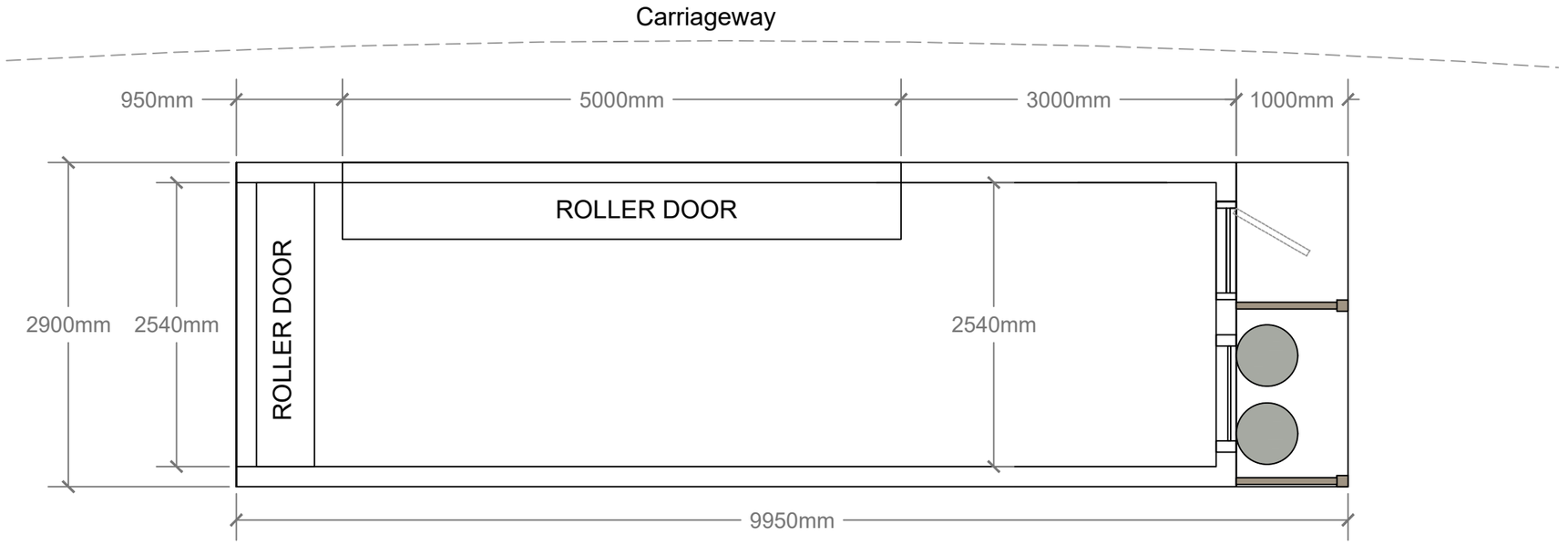

Proposed floor plan

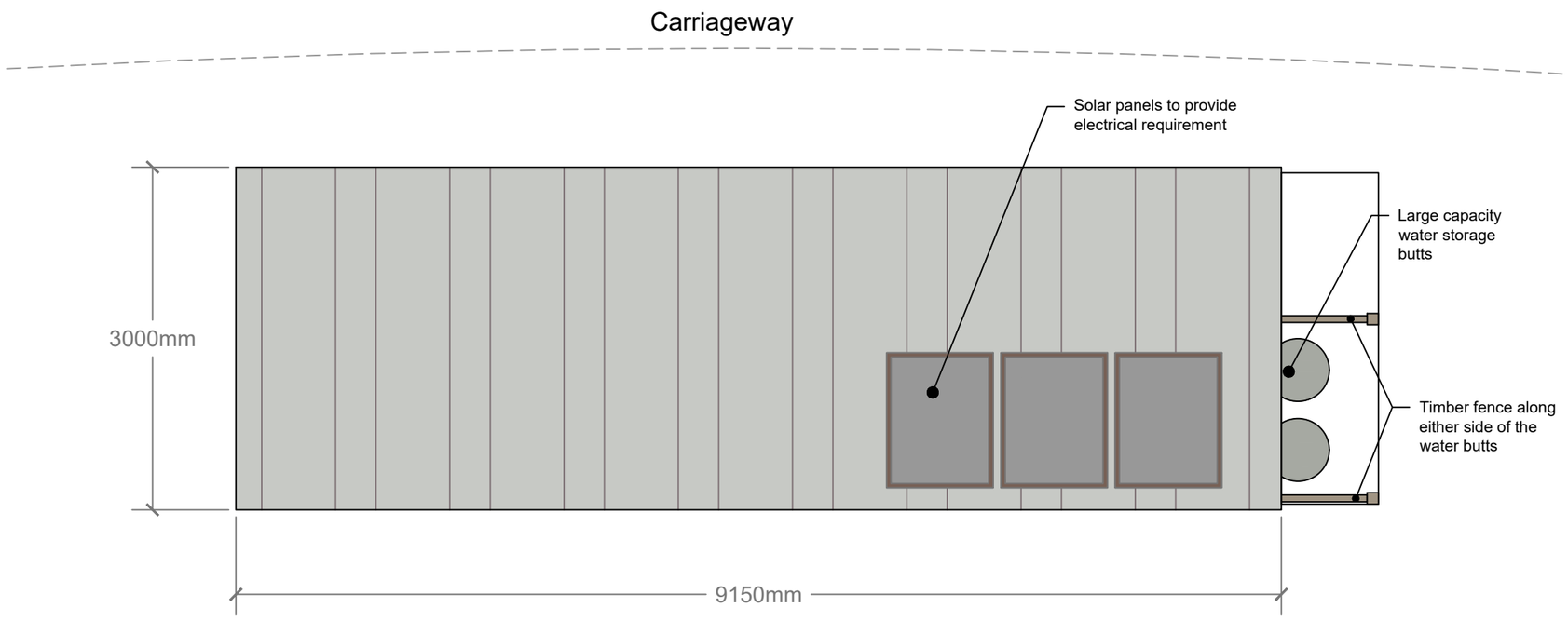

Proposed roof layout

C:\Users\TI\TechIllustration\Edington\TI-JD001-004 and 005 buildingPlans.dwg

Proposed garage
Internal layout and roof plan

Project: Proposed erection of garage

Client: Julia Dorsett

Number: TI-JD001.005
Scale: 1:50 @A3
Date: 12 oct 2023

Technical Illustration
Contact: Gillian at gepakeman@gmail.com or telephone 07379019667