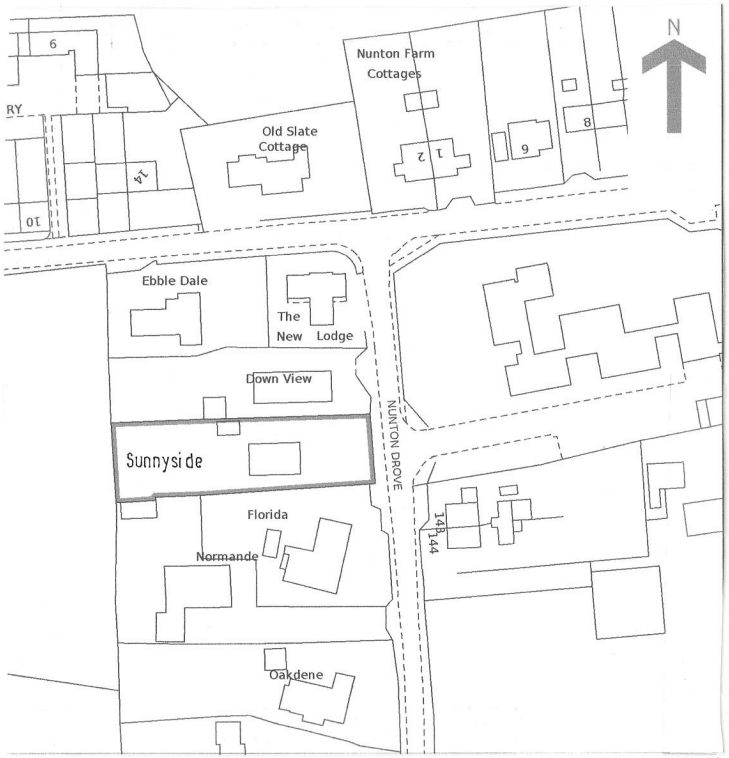

Location Plan
1:1250

0 10 20 30 40 50 metres

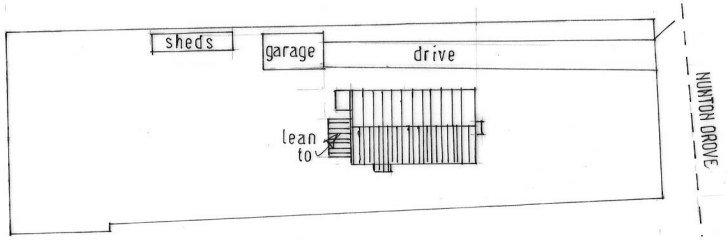

Block Plan As Existing
1:500

0 10 20 30 metres

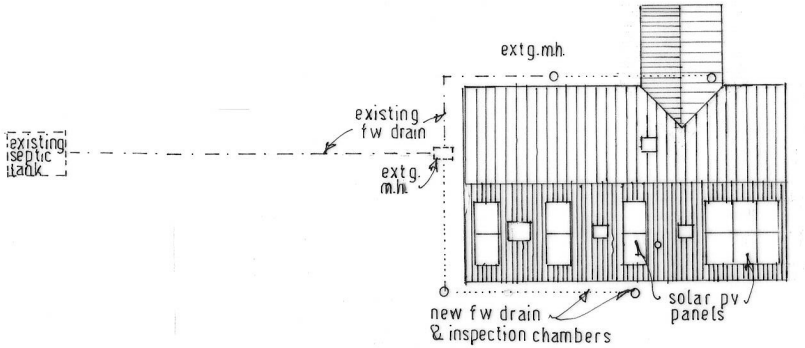

Roof & FW Plan
1:200

0 5 10 metres

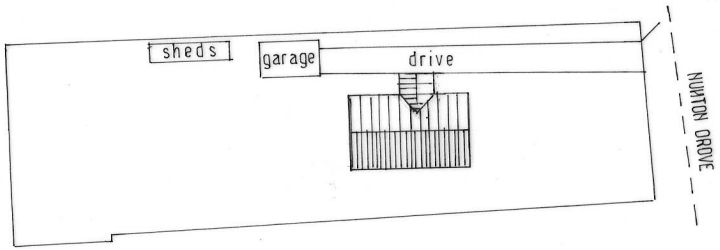

Block Plan as Proposed
1:500

0 10 20 30 metres

rev A.porch altered 18.11.23

BLOCK PLAN AS PROPOSED
LOCATION PLAN
BLOCK PLAN AS EXISTING
ROOF PLAN PROPOSED

SUNNYSIDE NUNTON
SP5 4HZ

10/2023
page size A3