

SJ Stephens Associates

ARBORICULTURAL, LANDSCAPE & MANAGEMENT CONSULTANTS

Savernake Barn
Stokke Common
Great Bedwyn
Marlborough
Wiltshire SN8 3LL
Tel: 01672 871 862
www.sjstephens.co.uk
e: info@sjstephens.co.uk

Arboricultural Impact Assessment

- Tree Survey
- Tree Protection Plan
- Arboricultural Method Statement

For:-

Erection of extensions and garage, following demolition of existing garage

At:-

Coppers End
Chopping Knife Lane
Marlborough
SN8 2AT

On behalf of:-

Mr Norman
Coppers End
Chopping Knife Lane
Marlborough
SN8 2AT

Prepared by:

Catherine Fforde, HND Hort,
Dip Arb L4(ABC), MCIHort, MArborA
Email: catherine@sjstephens.co.uk

Approved by:

Simon Stephens MA Oxon, Dip Arb(RFS), MArborA, C Env. MICFor
Email: simon@sjstephens.co.uk

Survey Date: 10th November 2023
Report Date: 16th November 2023
Project no: 2195

CONTENTS

1 BACKGROUND
2 SURVEY DETAILS AND SCOPE
3 SURVEY LIMITATIONS
4 LEGAL PROTECTION OF TREES
5 ARBORICULTURAL METHOD STATEMENT
6 ARBORICULTURAL IMPACT ASSESSMENT
7 REFERENCES

Appendices
A Tree Protection Plan: drawing no: 2195-01
B Tree Schedule
C BS 5837:2012 - Trees in relation to design, demolition and construction, Table 1
D Tree Protection Fencing Detail
E Site photos
F Proposed Site Plan

1 BACKGROUND

1.1 This Arboricultural Impact Assessment has been instructed by Tuttle Architectural Services, on behalf of Mr Norman, to specify tree protection measures and to assess the arboricultural impact of the proposed erection of new extensions and a replacement garage, following demolition of existing garage.

1.2 Trees were surveyed, with findings shown in the Tree Schedule in Appendix B and plotted on the Tree Protection Plan in Appendix A. This also shows tree protection measures, which are specified in the Arboricultural Method Statement in section 5 below. The arboricultural impact is assessed in section 6, which assumes that these measures are followed.

1.3 The tree survey was undertaken, and this report has been prepared, by Catherine Fforde HND Hort, Dip Arb L4(ABC), MCIHort, MArborA and approved by Simon Stephens MA Oxon, Dip Arb (RFS), MArborA, C Env, MICFor a Registered Consultant with the Arboricultural Association, with over 20 years relevant experience.

1.4 This survey and report have been prepared in accordance with the recommendations of BS 5837:2012, Trees in relation to design, demolition and construction - Recommendations.

1.5 Documentation supplied:

- Tuttle Architectural Services, Existing Site Plan: drawing no: 01A
- Tuttle Architectural Services, Proposed Plans, Elevations, Section, Block & Location Plan: drawing no: 02A
- Tuttle Architectural Services, Proposed Garage Plans & Elevations: drawing no: 03A
- Tuttle Architectural Services, Proposed Roof/Site Plan, Block & Location Plan: drawing no: 04A

2 SURVEY DETAILS AND SCOPE

2.1 The site survey included trees and shrubs, within influencing distance of the proposed development, with a stem diameter over 75mm at 1.5m height, as shown located on the Tree Protection Plan, included as Appendix A.

2.2 Tree inspection took place from ground level with the use of binoculars, sounding hammer and metal probe using the Visual Tree Assessment method (Mattheck & Breloer 1994). The presence and condition of bark and stem wounds, cavities, decay, fungal fruiting bodies and any structural defects that could increase the risk of structural failure were noted.

2.3 Tree diameters were measured using a girthing tape and tree heights were measured using a hypsometer. Where use of a tape was restricted by site factors, diameters were estimated, with the diameter recorded in the tree schedule preceded by the word “est”.

2.4 At the time of the survey, the weather was overcast, but with no restrictions to visibility. Broadleaf trees were partially in leaf. In places, dense undergrowth restricted access/dense ivy restricted visibility of tree stems.

2.5 The suitability of trees for inclusion in the future development was considered, in particular considering the safe useful life expectancy, and sustainability, of trees on the site after development is completed.

2.6 Tree details are shown on the Tree Protection Plan included as Appendix A. Tree locations have been determined by measuring distances from features shown on the plan, using a laser measuring device. The following information was recorded for each tree, and is shown in the Tree Schedule included as Appendix B:

- **Number:** an identity number for each tree, prefixed with a “T”, which cross references locations shown on the plan with the schedule in Appendix B. Where a number of trees are located close together and are similar in character and management requirements, they have been treated as a Group under a single number, prefixed with a “G”.
- **Species**: common name.
- **Tree height**: approximate height in metres.
- **Stem diameter**: diameter in millimetres, taken at 1.5m above ground. Where there are a number of stems, stem diameters are recorded in the condition column.

- **Branch spread**: approximate spread in metres to N,S,E and W of the trunk. The approximate branch spread is drawn on the plan.
- **Canopy clearance**: approximate height of the canopy above ground. Where a significant, low lateral branch is present, its height and direction of growth is included in the Condition column.
- **Age class**: Young, Semi-mature, Early mature, Mature, Over-mature, Veteran.
- **Condition**: features that affect the safe useful life expectancy and amenity of the tree, including the presence of decay or any physical defect.
- **Management Recommendations**: recommendations to ensure the health and safety of the tree, within the future development.
- **Estimated Remaining Contribution**: <10 years, 5-15 years, 10-20 years, 15-30 years, 20-40 years, >40 years.
- **Category grading**: tree classification taken from BS 5837:2012, Trees in relation to design, demolition and construction (see Appendix C for details), as follows:
    - Category U: Unsuitable for retention, trees with less than 10 years life expectancy, normally recommended for removal (Red)
    - Category A: high quality trees, able to make a substantial contribution for at least 40 years, normally retained unless there is an over-riding reason for removal and appropriate mitigation. (Green)
    - Category B: moderate quality trees, able to make a significant contribution for at least 20 years, normally retained. (Blue)
    - Category B/C: an intermediate category between categories B and C (not specifically described in BS5837). Trees, which should be retained wherever possible, providing retention does not unreasonably constrain the layout. (Blue)
    - Category C: low quality, in adequate condition to remain for at least 10 years, or young trees <150mm stem diameter. Trees which can be removed to allow the desired layout or new planting. (Grey)

  For category A, B and C trees, a subcategory has been allocated, providing information on the reasons for selection of a specific category, as follows:
    - Subcategory 1: mainly arboricultural values.
    - Subcategory 2: mainly landscape values.
    - Subcategory 3: mainly cultural values, including conservation.
- Trees have been classified irrespective of the possible proximity to future construction. The BS 5837 category is colour coded, as indicated above, on the plan included as Appendix A.
- **Protection Distance:** the protection distance in metres required to provide the Root Protection Area recommended in BS 5837, assuming a circular area centred on the tree.
- **Root Protection Area (RPA):** the area in m^2, as recommended in BS 5837, to provide sufficient rooting area to ensure tree survival and which, in most situations, should be fenced off to prevent root damage from construction activities.

3 SURVEY LIMITATIONS

3.1 No internal decay devices, or other invasive tools to assess tree condition, were used.

3.2 No soil excavation or root inspection was carried out.

3.3 This survey has not considered the effect that trees or vegetation may have on the structural integrity of future building through subsidence or heave.

3.4 The tree survey has been undertaken for planning purposes. Although any obvious structural defects have been noted, a Tree Hazard Assessment has not been carried out. Mature trees close to highly populated areas or public highways should normally be checked for safety annually, by a suitably qualified person.

4 LEGAL PROTECTION OF TREES

4.1 Wiltshire Council confirmed by email on 06.11.2023, that there are Tree Preservation Orders in place on trees at Coppers End and on trees in neighbouring properties. The Tree Preservation Orders which are shown to cover trees within influencing distance of the development are referenced as TPO E415 and TPO E427. The site is not within a Conservation Area. The presence of Planning Conditions currently attached to the site, was not checked.

4.2 Once planning permission has been granted, provided the application clearly shows any trees to be removed or pruned, this overrides protection provided by Tree Preservation Orders, provided the work is necessary to implement the approved development. If not essential, a separate tree work application will need to be submitted for trees protected by a Tree Preservation Order.

5 ARBORICULTURAL METHOD STATEMENT

5.1 Site Overview

5.1.1 The proposal is for the erection of new extensions and a replacement garage, following demolition of existing garage. The proposed site plan is included as Appendix F and has been added to the survey drawing, along with tree details, to create the Tree Protection Plan attached as Appendix A.

5.1.2 The existing detached garage, which is located to the east side of the house, is to be demolished and the attached wooden storage shed, located at the northern end, removed. A new single storey extension is proposed to this side, to provide bedroom accommodation. Two trees, a birch (T17) and a silver maple (T18) are located just to the north of the garage and store. The store is to be removed, together with a concrete surface, from the root protection areas of the trees.

5.1.3 A new, detached garage is proposed to the west side of the house. In this area the ground level adjacent to the boundary is at a lower level than that surrounding the house; there is a grass bank which facilitates the level change. Excavation of the bank is proposed to allow the garage to be set at the lower ground level. The existing driveway is to be extended to provide access to the garage. A cherry (T12) is located in the adjacent property to the west side of the new driveway extension.

5.1.4 Trees are located with the lawn area to the south and west of the driveway, in a raised bed along the east side of the driveway, and in brick retained island beds. Photos are included in Appendix E.

5.2 Tree Work

5.2.1 Details of proposed tree works are included in the Tree Schedule included as Appendix B.

5.2.2 One hedge is proposed for removal to facilitate the development, and offsite tree has been recommended for removal for reasons of sound arboricultural management, as detailed in section 6.1 below.

5.2.3 All tree work must be undertaken to the standards set out in BS 3998:2010 Tree work – Recommendations.

5.3 Root Protection Areas

5.3.1 Root Protection Areas are shown for all trees in the Tree Schedule included as Appendix B. They are also shown for all retained trees, as circular areas centred on the trunk, on the Tree Protection Plan included as Appendix A. Where there are physical obstructions to root growth the Root Protection Area should be shown as an equivalent area that is more likely to reflect actual root growth. The Root Protection Area shows the area around a tree in which all construction activity must normally be excluded, unless appropriate protection measures are implemented.

5.3.2 For tree numbers T1, T3, G4, T7, T21, T22 and G23, the retaining walls within the Root Protection Areas are likely to have prevented or restricted root growth, however in this case the Root Protection Areas of these trees have been shown as standard circular areas by default as none of the Root Protection Areas of these trees will be affected by the proposed development.

5.4 Tree Protection Fencing

5.4.1 Tree Protection Fencing must be erected where shown on the Tree Protection Plan, included as Appendix A. This will provide full protection of the Root Protection Areas of all retained trees within the site, other than for:

- area hatched in blue on the Tree Protection Plan, where No-Dig Construction must be used, as described in section 5.5 below, to protect underlying roots.
- areas and hatched shaded cyan on the Tree Protection Plan, indicating Ground Protection Areas, where roots must be protected, as described in section 5.6 below.
- area shaded red on the Tree Protection Plan, where there will be excavation at the edge of a Root Protection Area, but where hand excavation must be used, as described in section 5.7, to minimise potential root damage.
- areas where existing retaining walls are preventing ingress into Root Protection Areas, and areas where trees are set back at sufficient distance so as to be unaffected by the proposed construction works.

5.4.2 Tree works can be completed before Tree Protection Fencing is erected, however no contractors plant or vehicles must be allowed to track within the Root Protection Areas unless ground protection panels are laid.

5.4.3 Tree Protection Fencing must be from weldmesh panels, at least 2m high, securely fixed, with wire or scaffold clamps, to a rigid framework. This framework must be constructed from scaffold tubes with vertical tubes, at a maximum interval of 3m and driven into the ground at least 0.6m. The structure must be well braced to resist impacts, constructed as per Figure 2 of BS5837:2012, which is reproduced in Appendix D. Alternatively, weldmesh panels can be supported on blocks, providing the blocks are pinned to the ground with road pins, or similar, and the panels are braced, as per Figure 3 of BS5837:2012, which is also reproduced in Appendix D.

5.4.4 After erection of Tree Protection Fencing and installation of ground protection, two days' notice must be given to the local planning authority before demolition or construction, including any ground work, starts on site.

5.4.5 Tree Protection Fencing must be maintained and retained for the duration of the works, or until such time as agreed in writing with the local planning authority.

5.4.6 Weatherproof notices must be fixed to the Tree Protection Fencing, and maintained, stating:-

TREE PROTECTION AREA
KEEP OUT
TREES ENCLOSED BY THIS FENCE ARE PROTECTED BY PLANNING CONDITIONS AND A TREE PRESERVATION ORDER
CONTRAVENTION MAY LEAD TO CRIMINAL PROSECUTION
THE FOLLOWING MUST BE OBSERVED BY ALL PERSONS:

- The Protection Fence must not be moved
- No person or machine must enter the area
- No materials or spoil must be deposited
- No excavation must be permitted

ANY INCURSION INTO THE PROTECTED AREA MUST BE WITH THE WRITTEN PERMISSION OF THE LOCAL PLANNING AUTHORITY

5.5 No-Dig Construction Area

5.5.1 The No-Dig Construction area is shown hatched blue on the Tree Protection Plan included as Appendix A. This covers an area within a Root Protection Area where new hard surfacing is to be constructed on an existing soft area.

5.5.2 Where existing soft areas within No-Dig Construction areas are to be replaced by new hard surfacing, they must be constructed without excavation apart from the removal of turf/organic matter, which must be carried out by hand. Engineering details must avoid localised compaction, using both a two dimensional geogrid, and a three dimensional cellular confinement system as integral components of the sub-base. A typical section is shown on the Tree Protection Plan included as Appendix A. As well as being fit for purpose, the design and methodology must protect tree roots, by ensuring the following:-

- topsoil/turf can be removed carefully by hand to a maximum of 50mm, but less if roots are found nearer the surface.
- following leveling with soil or sand, a permeable, non-woven geotextile membrane, must be laid.
- a suitable two dimensional geogrid, such the TriAx Geogrid supplied by Tensar International (www.tensar.co.uk), or the Biaxial Geogrid supplied by Geosynthetics Ltd (www.geosyn.co.uk), must be laid over the entire area and underneath the edging.
- pressure treated timber edging boards, supported by driven stakes must be used.
- a suitable cellular confinement system must then be laid to manufacturers instructions on top of the geogrid. Products that might be considered include Geoweb, supplied by Greenfix (www.greenfix.co.uk) or Cellweb, supplied by Geosynthetics Ltd (www.geosyn.co.uk). The depth of the system must be adequate to take the maximum axle weight, as per manufacturers guidance.
- the cellular confinement system must be filled with clean (no fines), washed angular, 4/20mm, stone to provide load support, while allowing air and moisture to permeate to the root zone.
- a further permeable, non-woven geotextile membrane, such as TreetexT300, or an alternative approved product which has similar oil trapping qualities, must be laid over the cellular confinement system.
- a porous, surfacing material, free from contaminants, must then be laid. Either sand bedding and block paving, gravel or permeable tarmac would be suitable.
- removed turf/topsoil can be used to grade surrounding ground levels.

5.5.3 Site traffic, including pedestrians, must not be allowed on the No-Dig area until roots are protected by the No-Dig surfacing, or unless suitable ground protection has been laid. If access is required across No-Dig areas for plant, before the No-Dig surfacing is laid, ground protection panels must be laid. Either Trakmats (supplied by the Marwood Group, www.marwoodgroup.co.uk), Groundtrax panels (see www.groundtrax.com), Ground-Guards, as supplied by Greentek (www.greentek.org.uk), or a similar approved product, must be used, laid on top of a compressible layer of sand or woodchips, laid onto a geotextile. If access is required for pedestrians, 25mm plywood or side butting scaffold boards must be laid, on top of a compressible layer of sand or woodchips, laid onto a geotextile.

5.5.4 Alternatively, the build up for the new No-Dig permeable surface can be used for construction traffic providing an adequate depth of cellular confinement system is used for the loads anticipated. In this case, the same section detail shown on the Tree Protection Plan must be used but with the sand and porous paving surface replaced with clean stone. This can then be removed together with the underlying geotextile at the end of the construction period and a new geotextile laid and final surface laid.

5.5.5 No-Dig construction will result in an increase in levels. This must be fully taken account of in all other aspects of the design.

5.6 Ground Protection Areas

5.6.1 The Ground Protection Areas, which are shaded cyan on the Tree Protection Plan, contain hard surfacing which is protecting any underlying roots and which must stay in place during the construction period unless further protection measures are implemented.

5.6.2 Hard surfacing in Ground Protection Areas can be replaced if the existing sub-base remains in place and if the new surfacing is permeable.

5.6.3 If the existing sub-base is removed, ground protection must be laid immediately and then No-Dig construction (as per section 5.5) used for the build up. No excavation must be permitted beneath the base course in these areas.

5.6.4 The Ground Protection Area, which is hatched cyan on the Tree Protection Plan, contains a soft area where ground protection must be laid to protect any underlying roots.

5.6.5 Adjacent to the new garage, where pedestrian movement and erection of scaffolding will take place within the Root Protection Area of a tree, a Ground Protection Area is shown on the plan. The Tree Protection Fencing must be erected 1.2m from the building line, with the ground between the Tree Protection Fence and the building, and the ground between the site boundary fence and the building protected by either 25mm plywood or side butting scaffold boards, on top of a compressible layer of sand or woodchips, laid onto a geotextile. Alternatively, scaffold boards can be fixed on a driven scaffold frame, so as to form a suspended walkway.

5.6.6 Ground protection must be laid before any construction starts on site and must be maintained in good condition until all construction operations have been completed. Ground protection must be fit for purpose and be replaced with an alternative product if panels start to move or any sign of ground compaction is seen.

5.6.7 An excavator must only be used for the removal of the existing hard surfacing within the Root Protection Areas of T17 and T18, if it can work only from areas of hard standing, or from outside the Root Protection Areas. A banksman must be present during this operation and excavation must go no deeper than the existing base course and must cease immediately if roots are found. Once hard surfacing has been removed, the area must immediately be topsoiled using good quality topsoil supplied to BS3882:2015.

5.7 Hand Dig Area

5.7.1 The Hand Dig trench, shown cross-hatched red on the Tree Protection Plan, must be dug to formation level /a depth of 1m by hand, neatly severing any roots found, using secateurs or a hand saw. Any further excavation required, either to a greater depth or outside the hand dug trench, can be carried out with an excavator, since it is unlikely that significant live roots will be found.

5.7.2 Heavy-duty polythene must be used to line the side of the trench adjacent to the tree, before concrete is poured, to avoid the toxic effects of cement on tree roots.

5.7.3 On no account must use of an excavator be used in the top 1m of the Hand Dig area, which would rip roots and cause unnecessary damage.

5.8 General measures

5.8.1 No construction activity whatsoever, including routing of underground services, storage of materials or on-site parking, must be allowed within Root Protection Areas, other than that specifically described above.

5.8.2 No mixing or storage of cement, concrete, oil, fuel, bitumen or other chemicals must be permitted within 10m of the trunk of any retained trees, nor in any position where the slope of the ground could lead to contamination of the Root Protection Area.

5.8.3 Fires must not be lit in a position where their flames could extend to within 10m of foliage, branches or trunk.

5.8.4 Landscape works carried out within Root Protection Areas must be undertaken with great care so as not to damage shallow roots. Tractor mounted rotovators or other heavy mechanical cultivation must not be used within the Root Protection Areas.

5.8.5 If any tree shown for retention is removed, uprooted or destroyed, another tree must be planted in the same location, at a size and species to be agreed in writing with the Local Planning Authority.

5.8.6 A copy of this report and the Tree Protection Plan must be kept on site and must be fully understood by the Site Agent.

5.9 Bat roosts

5.9.1 The current legislation makes it a criminal offence to disturb, damage or destroy any bat roost or hibernation area. Contractors must be reminded of their responsibilities and should contact the relevant authorities if any signs of bats are found.

5.10 Birds

5.10.1 The current legislation makes it a criminal offence to disturb nesting birds. The nesting season is generally assumed to be from 1st March to 31st July, however this can vary depending on species and location. During these months a careful inspection must be made before work commences and works must be postponed if active nests are found.

6 ARBORICULTURAL IMPACT ASSESSMENT

6.1 The following tree / tree group, categorized as per BS 5837 (see Appendix C for details), are proposed for removal:

- Category U – unsuitable for retention: One tree – T20, and one tree group – G13.

6.2 T20, an ash tree, is not within site ownership and removal is not required to facilitate the development; removal has been recommended to alleviate the risk from future failure. G13 is a Leyland cypress hedge which large areas of dead foliage and which is considered to have reached the end of its useful life expectancy. The hedge is providing screening between properties however this screening can be replaced with a new vegetated boundary treatment following completion of the garage construction.

6.3 Protection measures have been specified to protect the Root Protection Area of all retained trees, other than for:-

- T12, where there will be excavation with approximately 0.46m^2, or 0.44% of the Root Protection Area.

The amount of projected root loss is too small to produce any adverse impact on the tree. Hand dig excavation has been specified to prevent unnecessary root loss or damage which would be caused by mechanical excavation.

6.4 Although preservation of Root Protection Areas is deemed to protect tree roots, in some cases buildings may need to be set further back to ensure the future sustainability of trees. If buildings are too close to trees, future occupiers may be likely to seek the reduction, or removal of trees, if they are cutting out excessive sunlight or providing a claustrophobic or threatening environment. Section 5.2.2 of BS 5837:2012 states that "an indication of potential direct obstruction of sunlight can be illustrated by plotting a segment with a radius from the centre of the stem equal to the height of the tree, drawn from due North West to due East, indicating the shadow pattern through the main part of the day." Shading patterns for key trees have been shown on the plan. This shows that new extensions are outside potential shading areas. There will be no large trees close enough to the new extensions to produce a claustrophobic or threatening environment for future residents. Instead, retained trees will contribute to the amenity of the site and the screening of property. The proposals will not therefore adversely affect the sustainability of retained trees.

6.5 Provided the recommendations in this report are followed, the arboricultural impact of this development on existing tree cover is considered acceptable.

7 REFERENCES

- *BS5837:2012 Trees in relation to design, demolition and construction – Recommendations.*
- *BS3998:2010 Tree Work. Recommendations.*
- *Common sense risk management of trees (FCMS024). Published by the National Tree Safety Group (www.ntsgroup.org.uk)*
- *The use of Cellular Confinement systems near Trees: a guide to good practice Arboricultural Association Guidance Note 12.*

APPENDIX A

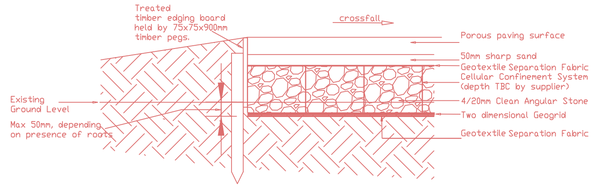

DRIVE CONSTRUCTION DETAIL IN NO-DIG AREA

Coppers End

Barnfield House

Ash Lodge

KNIFE LANE

LONDON ROAD

T15 Birch B2
G14 Hedge C2
G9 Privet hedge C2
T16 Beech B2
T17 Birch B-C2
T18 Silver maple B-C2
REPLACEMENT GARAGE
G13 Leyland cypress hedge U
HAND DIG AREA, AS SPECIFIED IN THE ARBORICULTURAL METHOD STATEMENT
EXISTING HARD SURFACING AND STORAGE SHED TO BE REMOVED
EXISTING GARAGE TO BE REMOVED
T12 Cherry B2
G14 Hedge C2
T7 Magnolia C2
G4 Small trees/Shrubs C2
NEW EXTENSIONS
T8 Plum C2
T9 Rowan B-C2
T20 Ash U
T21 Beech B2
T10 Birch B2
T6 Weeping pear U
G5 4no. Birch B2
T22 Beech B2
T11 Birch B2
T3 Norway maple C2
G2 Beech hedge C2
G23 2no. Beech B-C2
T1 Norway maple C2
TREE PROTECTION FENCE TO MEET END OF DRIVEWAY RETAINING WALL

N
W
E
S

Scale
0 5m 10m

Key

- Category U
- Category A
- Category B
- Category C
- Crown spread: retained trees
- Trees For Removal
- Root Protection Area
- Tree Protection Fence
- No-Dig Construction
- Ground Protection Area: existing hard surface
- Ground Protection Area: existing soft surface
- Hand Dig Area
- BS 5837 Shade Area

SJ Stephens Associates
Savernake Barn, Stokke Common
Great Bedwyn
Marlborough
Wiltshire SN8 3LL
01672 871862
www.sjstephens.co.uk

JOB TITLE	COPPERS END
DRAWING TITLE	TREE PROTECTION PLAN
DRAWING NUMBER	2195–01
REV	
REVISIONS	
SCALE	1:200 at A1
DATE	NOV 23
DRAWN BY	cf

Tree/ Group No.	Species	Height (m)	Stem Diam. at 1.5m (mm)	Branch Spread (m)				Canopy Cleara -nce (m)	Age Class	Observations	Management Recommendations	Estimated Remaining Contribution (years)	BS 5837 Category Grading	Protect -ion Distnce (m)	Root Protect. Area (m2)
				N	S	E	W								
T1	Norway maple	10	370	3	3	2	3	2.5	Early mature	Growing on bank, behind retaining wall. Previously reduced. Stem bifurcates at 1.8m - tight fork. Poor form.		10-20	C2	4.4	62
G2	Beech hedge	2 - 3	50 - 75					0	Early mature	Boundary hedge.		15-30	C2	0.9	3
T3	Norway maple	8	210	3	2.5	3	3	3.0	Early mature	On bank, back from driveway edge. Leading stem topped. Low limbs removed. Crown thinned. Stem girdled at 1.4m.		10-20	C2	2.5	20
G4	Small trees/Shrubs	0.5 - 6	25 - 150					0.0	Early mature	In retained border, along driveway edge. Species including ornamental conifers, hazel, cotoneaster, mahonia, choisya, laurel, osmanthus and abelia.	Cut back as required at northern end to provide clearance for construction of new extension.	5-15	C2	1.8	10
G5	4no. Birch	11	150 - 230					2.5	Early mature	Growing in retained island bed. Previously topped. Ivy beginning.	Clear basal ivy.	20-40	B2	2.8	24
T6	Weeping pear	4.5	170	2.5	2.5	2.5	2.5	1.8	Mature	Large tear out wound at 2.5m to northeast, where a section has broken out. Life expectancy limited by wound.		<10	U	2.0	13
T7	Magnolia	4	120	1.5	2	2.5	1.5	2.0	Early mature	Growing in retained bed. Three main stems from base - 60, 75 & 75mm. Shrubby flowering tree.		20-40	C2	1.4	7
T8	Plum	5	110	2	1	3	3	0.5	Early mature	Three stems - 50, 60 & 75mm.		15-30	C2	1.3	5
T9	Rowan	10	240	3.5	2	2	4	1.5	Mature	Two stems from 0.6m - 150 & 190mm - tight fork.		15-30	B-C2	2.9	26
T10	Birch	9	240	5	2	4.5	1	1.5	Early mature	Three stems from 0.6m - 130, 130 & 150mm. Southwest stem bifurcates at 1.8m. Low limbs removed. Decay points in some old pruning wounds. Good vitality.		20-40	B2	2.9	26
T11	Birch	10.5	310	4.5	3	3	2	4	Early mature	Four stems from 0.9m - 130, 140, 160 & 180mm. Northwest stem bifurcates at 2m. One stem removed from 1.4m. Low limbs removed. Decay points in old pruning wounds. Utility line through crown.		20-40	B2	3.7	43
T12	Cherry	5	est 480	3	3.5	5	4	E 3	Mature	Growing in adjacent property - base not inspected and all dimensions estimated. Spreading crown with scaffold limbs from approx 1m.		20-40	B2	5.8	104

Tree/ Group No.	Species	Height (m)	Stem Diam. at 1.5m (mm)	Branch Spread (m)				Canopy Cleara -nce (m)	Age Class	Observations	Management Recommendations	Estimated Remaining Contribution (years)	BS 5837 Category Grading	Protect -ion Distnce (m)	Root Protect. Area (m2)
				N	S	E	W								
G13	Leyland cypress hedge	3 - 3.5	175					0.2	Mature	Dead patches which will not regnerate. Providing screening but very low quality.	Remove and replace with new hedge or other vegetated boundary screen. No mechanical excavation to remove bases where within root protection area of T12.	<10	U	2.1	14
G14	Hedge	2	25					0	Early mature	Species including privet, thorn, dogwood and holly. Tightly clipped. Ivy.		10-20	C2	0.3	0
T15	Birch	11.5	270	3.5	3	3.5	5	2.5	Early mature	Stem forks at 4m. Good crown shape.		20-40	B2	3.2	33
T16	Beech	18.5	500	6	8.5	6	4.5	3	Early mature	Lowest lateral to south removed at 3.5m. Stem fork at 7.5m. Good vitality.		>40	B2	6.0	113
T17	Birch	11	220	2.5	2.5	1.5	2.5	2.5	Early mature	Previously topped. Asymmetric crown.		15-30	B-C2	2.6	22
T18	Silver maple	12.5	400	2.5	5.5	4.5	3.5	S 3.5	Early mature	Twin stem from 1.8m, with southern stem angled to south. Previously reduced and marred by pruning. Vigorous regrowth from reduction points. Decayed stubs.	Consider removal to allow T16 to develop. Plant replacement tree elsewhere in garden.	15-30	B-C2	4.8	72
G19	Privet hedge	2 - 3	25					0	Mature	Dense hedge. Some beech and yew growthing through. Ivy.		10-20	C2	0.3	0
T20	Ash	12.5	300	4	0	1	1	7	Early mature	Growing in adjacent property - base not inspected and all dimensions estimated. Four stems at 1.8m, average 150mm. In advanced stage of decline. Ivy over stems adding to sail weight and increasing risk of breakout.	Remove to prevent risk from future failure. **Note**: Tree is not within site ownership and removal will be the responsibility of the tree's owner.	<10	U	3.6	41
T21	Beech	11.5	est 700	6	6	6	3	3.5	Mature	Growing in raised border along driveway edge, to back of retaining wall. Previously reduced. Previously twin stem, with one removed at 1.8m to west. Dense basal growth prevents access to base.	Remove basal growth to facilitate future inspection and access.	>40	B2	8.4	222
T22	Beech	13	est 450	4	4	4	3.5	3	Early mature	Growing in raised border along driveway edge, to back of retaining wall. Previously reduced. Ivy over stem.	Remove section of ivy from base.	>40	B2	5.4	92
G23	2no. Beech	11.5	300 - 450					5	Early mature	Both in retained border, with bases 1m and 1.2m above driveway level. Both of poor form and structure. Previously reduced.		15-30	B-C2	5.4	92

BS 5837:2012, Table 1 Cascade chart for tree quality assessment

Category and definition	Criteria (including subcategories where appropriate)			Identification on plan
Trees unsuitable for retention (see Note)				
Category U Those in such a condition that they cannot realistically be retained as living trees in the context of the current land use for longer than 10 years	• Trees that have a serious, irremediable, structural defect, such that their early loss is expected due to collapse, including those that will become unviable after removal of other category U trees (e.g. where, for whatever reason, the loss of companion shelter cannot be mitigated by pruning) • Trees that are dead or are showing signs of significant, immediate, and irreversible overall decline • Trees infected with pathogens of significance to the health and/or safety of other trees nearby, or very low quality trees suppressing adjacent trees of better quality *NOTE Category U trees can have existing or potential conservation value which it might be desirable to preserve; see **4.5.7**.*			See Table 2
	1 Mainly arboricultural qualities	**2 Mainly landscape qualities**	**3 Mainly cultural values, including conservation**	
Trees to be considered for retention				
Category A **Trees of high quality** with an estimated remaining life expectancy of at least 40 years	Trees that are particularly good examples of their species, especially if rare or unusual; or those that are essential components of groups or formal or semi-formal arboricultural features (e.g. the dominant and/or principal trees within an avenue)	Trees, groups or woodlands of particular visual importance as arboricultural and/or landscape features	Trees, groups or woodlands of significant conservation, historical, commemorative or other value (e.g. veteran trees or wood-pasture)	See Table 2
Category B **Trees of moderate quality** with an estimated remaining life expectancy of at least 20 years	Trees that might be included in category A, but are downgraded because of impaired condition (e.g. presence of significant though remediable defects, including unsympathetic past management and storm damage), such that they are unlikely to be suitable for retention for beyond 40 years; or trees lacking the special quality necessary to merit the category A designation	Trees present in numbers, usually growing as groups or woodlands, such that they attract a higher collective rating than they might as individuals; or trees occurring as collectives but situated so as to make little visual contribution to the wider locality	Trees with material conservation or other cultural value	See Table 2
Category C **Trees of low quality** with an estimated remaining life expectancy of at least 10 years, or young trees with a stem diameter below 150 mm	Unremarkable trees of very limited merit or such impaired condition that they do not qualify in higher categories	Trees present in groups or woodlands, but without this conferring on them significantly greater collective landscape value; and/or trees offering low or only temporary/transient landscape benefits	Trees with no material conservation or other cultural value	See Table 2

Default specification for protective barrier

Figure 2

Key

1. Standard scaffold poles
2. Heavy gauge 2 m galvanised tube and welded mesh infill panels
3. Panels secured to uprights and cross-members with wire ties
4. Ground level
5. Uprights driven into the ground until secure (minimum depth 0.6 m)
6. Standard scaffold clamps

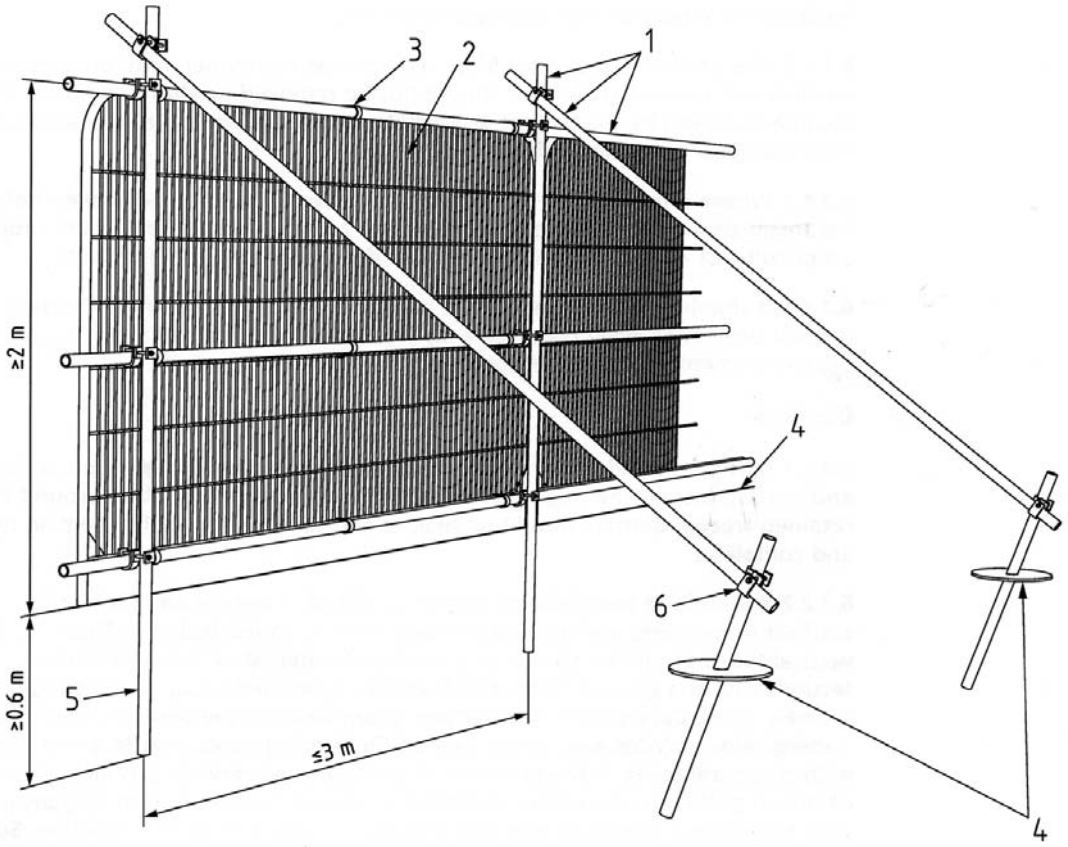

Examples of above-ground stabilising systems

Figure 3a

Stabiliser strut with base plate secured with ground pins

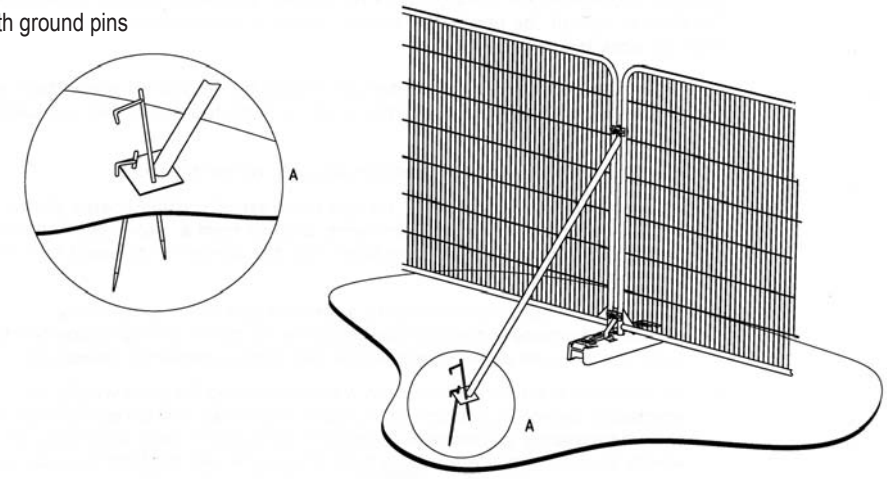

Figure 3b

Stabiliser strut mounted on block tray

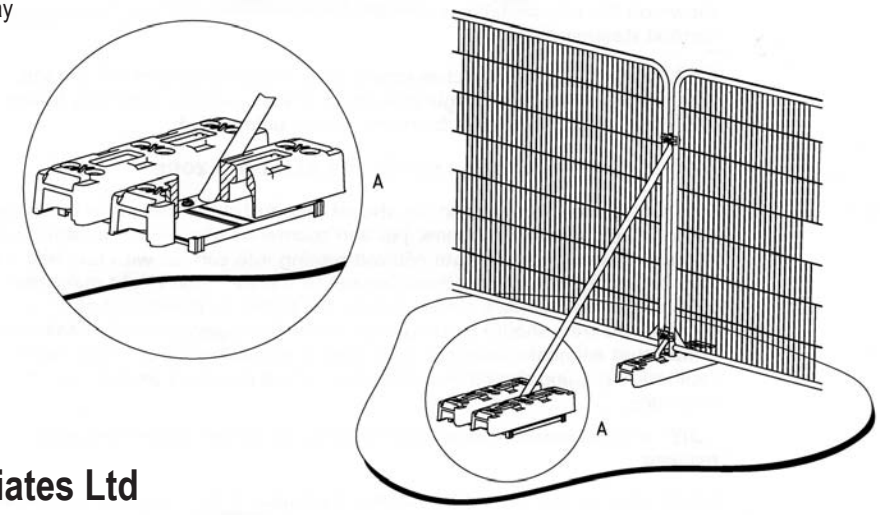



View from driveway entrance.

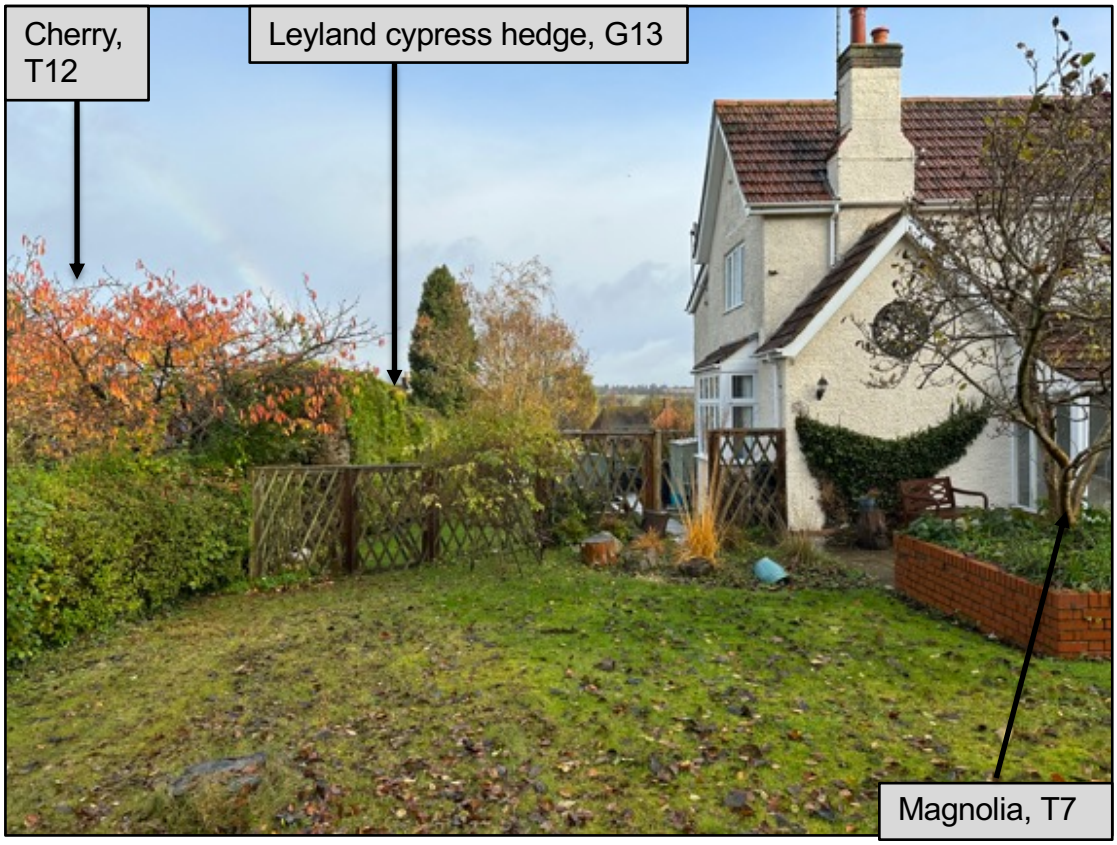

View of area for driveway extension, with replacement garage to be approximately 3.8m to north side (back) of trellis fence.



Location for replacement garage. Grass bank to be removed to allow garage to meet driveway level.

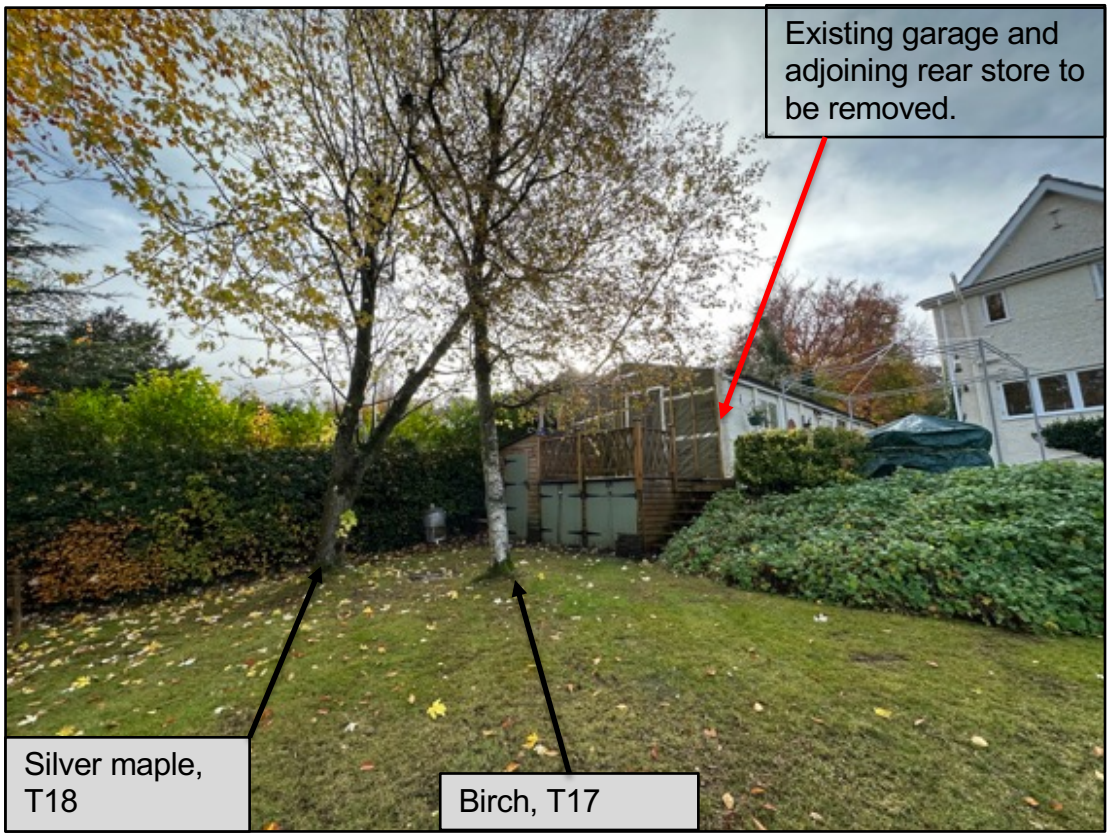



Above and below: Leyland cypress hedge, G13, proposed for removal and replacement with a new hedge, or other vegetated boundary screen.





Proposed Roof/Site Plan
Scale 1:100

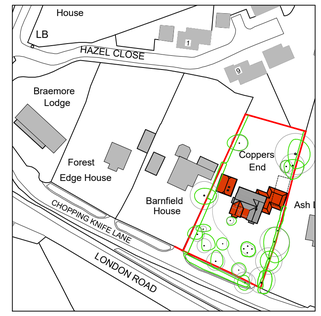

North

Proposed Location Plan
Scale 1:1250

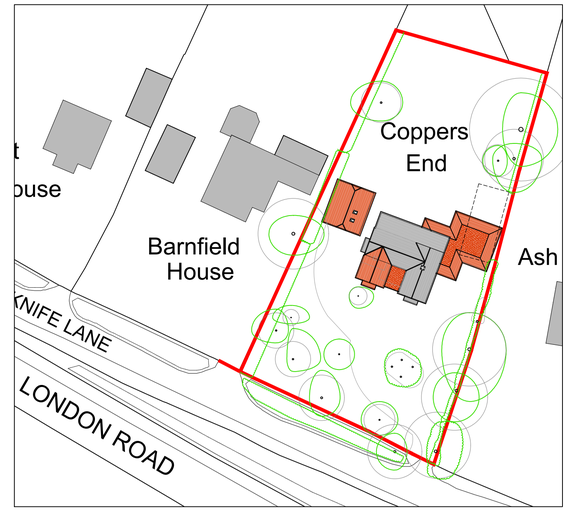

Proposed Block Plan
Scale 1:500

0 1 2 3 4 5
1:100 - Metres
0 1 2
1:50 - Metres
0 5 10 15 20 25
1:500 - Metres
0 10 20 30 40 50 60
1:1250 - Metres

Drawing for planning purposes only.
Not to be used for construction.

Tuttle architectural services
Ground Floor
6 Pelhams Court
Marlborough
Wiltshire SN8 2AG
T. 01672 518 278
E. info@tuttlearchserv.co.uk
facebook.com/tuttlearchserv
W. tuttlearchserv.co.uk

Job Title
Proposed Front Extension & Associated Internal Alterations - Proposed New Side Garage Extension with Accommodation Over @ Coppers End, Chopping Knife Lane, Marlborough, Wiltshire, SN8 2AT

For Mr Norman

Drawing Title
Proposed Roof/Site Plan, Block & Location Plan

DRAWING NUMBER	REV
Coppers End - 04	A

REVISIONS
Rev A - Amendments further to comments

SCALE	DATE	DRAWN BY	PAPER SIZE	JOB No.
As Indicated	June 23	MCW	A1	1433