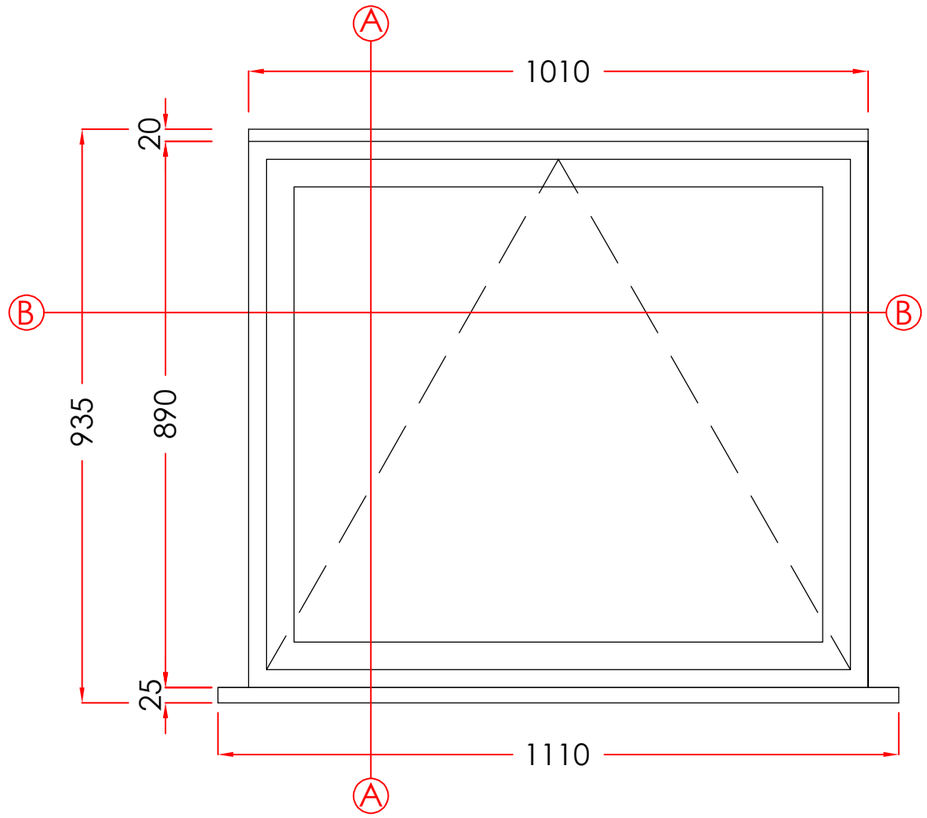

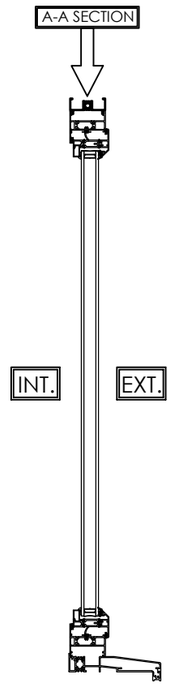

1. R/H SIDE

MATERIAL - ALUMINIUM
INTERNAL & EXTERNAL COLOUR - GREY
GLAZING - 28MM SEALED UNITS

VIEWED EXTERNALLY

THESE DRAWINGS ARE THE PROPERTY OF ANGLIAN HOME IMPROVEMENTS AND MUST NOT BE USED, DISTRIBUTED, LOANED OR COPIED WITHOUT THE EXPRESS PERMISSION OF ANGLIAN HOME IMPROVEMENTS.

Scale Bar 1:10 (mm)

0 100 200 300 400 500 600 700 800 900 1000 1100 1200 1300 1400 1500

Scale - 1:10
(Produced on A3 Paper)

Sheet 1 Of 4

Drawers Initials.
SF

CONTRACT No.: 30384558 **date:** 20/09/2023

PROPOSED: WINDOW REPLACEMENT
AT: (INSTALLATION ADDRESS)
96 GLOUCESTER ROAD
MALMESBURY
WILTSHIRE
SN16 0AL

Anglian Home Improvements