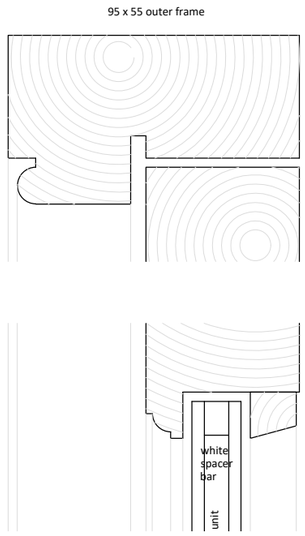

01 - typical head - scale 1:2

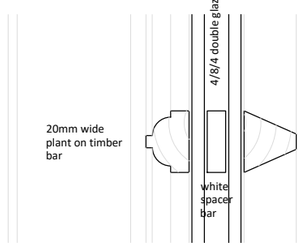

02 - typical glazing bar - scale 1:2

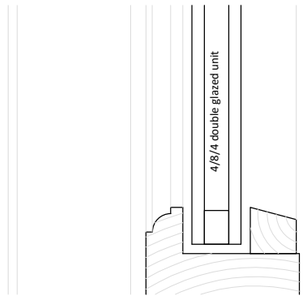

03 - cill detail - scale 1:2

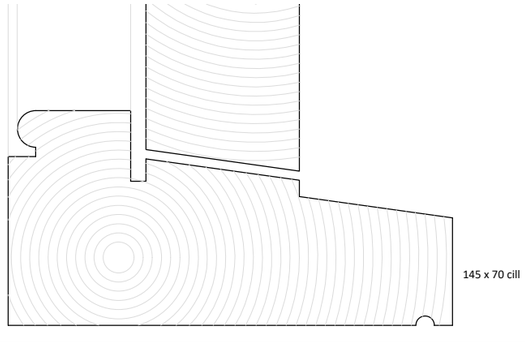

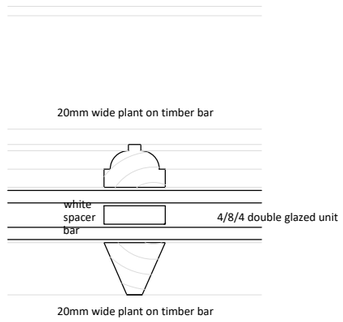

05 - typical glazing bar - scale 1:2

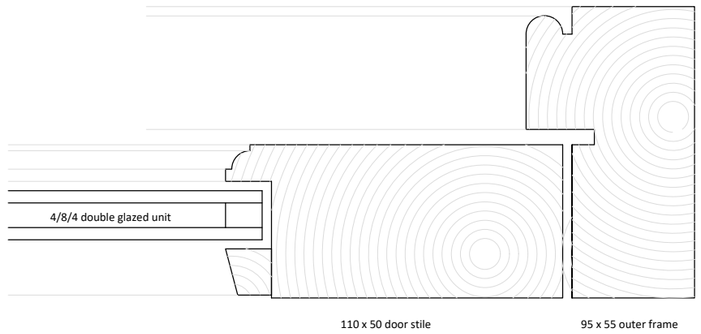

06 - typical glazing bar - scale 1:2

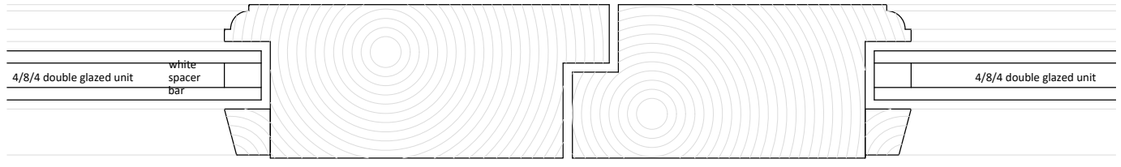

04 - typical glazing bar - scale 1:2

1:2 0 1cm 2cm 3cm 4cm 5cm

ISSUED FOR PLANNING

CLIENT	Dajam Ltd
PROJECT	13 St Margaret's Street
DRWG TITLE	Proposed French Door Details
DRWG NO	A17 23 39 P08
DRAWN	NB
SCALE	1:2 @ A3
DATE	18.10.23
CHK'D	NB

atelier 17 ltd
Atelier 17 Ltd, 28 Southleigh, Bradford On Avon, BA15 2EQ
mail@atelier17.co.uk www.atelier17.co.uk T.(01225) 862900 F.(01225) 862900

This drawing is copyright. Only figured dimensions to be used.
Contractors to check all dimensions before proceeding DO NOT SCALE

Proposed Drawings - 13 St Margaret's Street, BoA