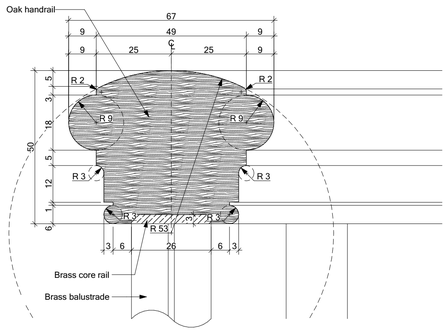

BALUSTRADE DETAIL
CONSERVATORY STAIR
SCALE 1:1

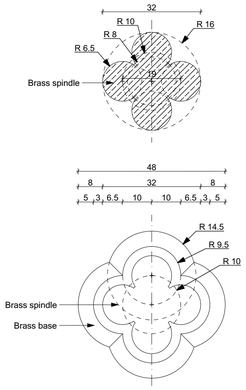

BRASS SPINDLE DETAIL PLAN
CONSERVATORY STAIR
SCALE 1:1

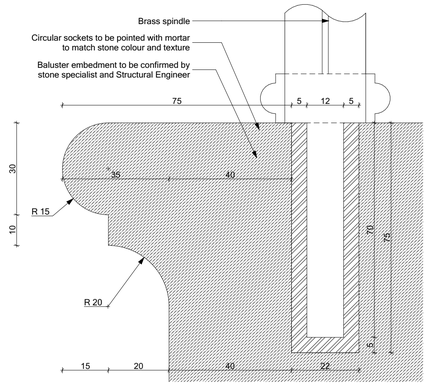

SECTION THROUGH TREAD EDGE
CONSERVATORY STAIR
SCALE 1:1

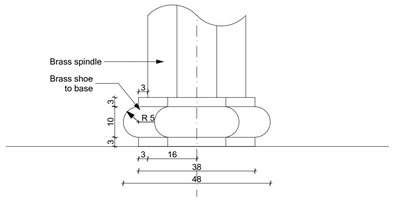

BRASS SPINDLE DETAIL ELEVATION
CONSERVATORY STAIR
SCALE 1:1

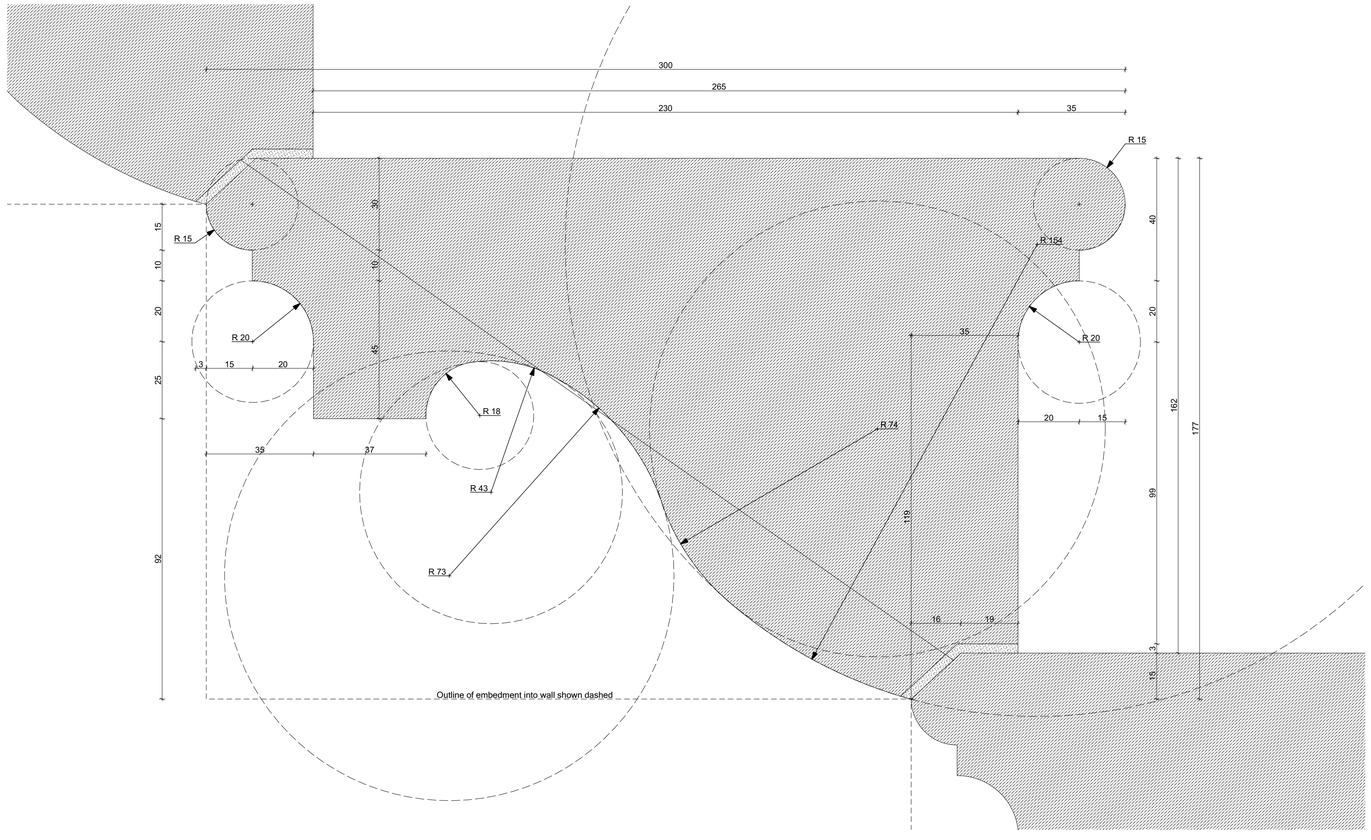

DETAIL THROUGH THREAD CONSERVATORY STAIR SECTION
SCALE 1:1

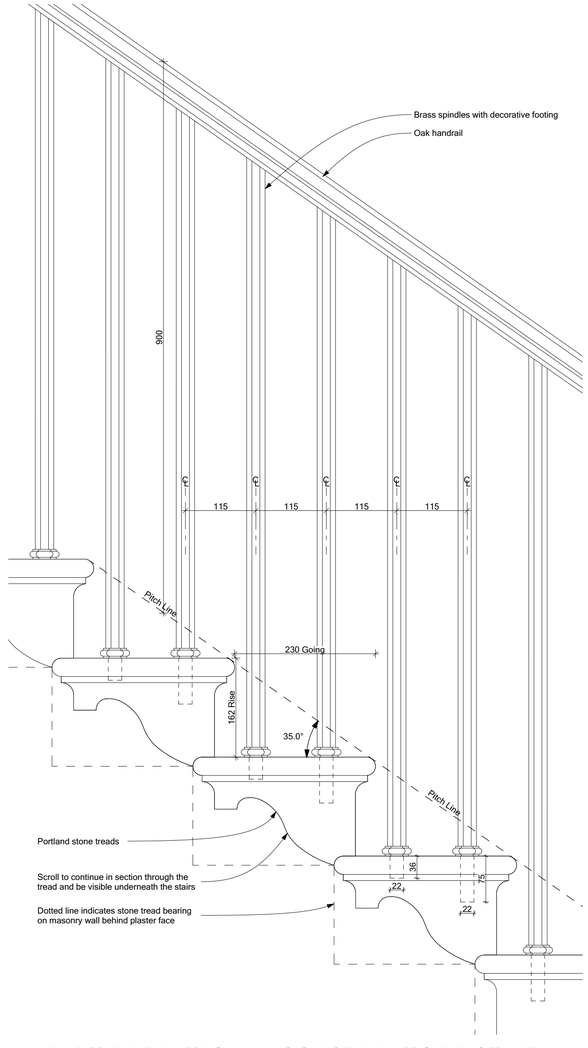

PART ELEVATION CONSERVATORY STAIR
SCALE 1:5

Adjacent Properties and Boundaries are shown for illustrative purposes only and have not been surveyed unless otherwise stated.
All areas shown are approximate and should be verified before forming the basis of a decision.
Do not scale other than for Planning Application purposes.
All dimensions must be checked by the contractor before commencing work on site.
No deviation from this drawing will be permitted without the prior written consent of the Architect.
The copyright of this drawing remains with the Architect and may not be reproduced in any form without prior written consent.
Ground Floor Slabs, Foundations, Sub-Structures, etc. All work below ground level is shown provisionally. Inspection of ground condition is essential prior to work commencing.
Reassessment is essential when the ground conditions are apparent, and redesign may be necessary in the light of soil conditions found. The responsibility for establishing the soil and sub-soil conditions rests with the contractor.

0 1 2

Scale 1:20

0 500mm

Scale 1:5



SOUTH WING OVERVIEW
SCALE 1:500

NOTE:
Dimensions to be checked on site by contractor prior to manufacture

NOTE:
Shop drawings of any joinery, stonework, or metalwork to be produced for review by Architect prior to manufacture.

Condition/Tender Issue

Rev	Date	Description	Initials
A	17/07/23	Condition issue	GW
-	23/06/23	Tender Issue	GW

PROJECT 6150 Tottenham House
Savernake

TITLE: Conservatory Stairs - South Pavilion Basement - Details 01

SCALE: 1:1, 1:5, 1:20, 1:500 @A1

DATE: Jan 2023

DRAWING No: 6150 / 633 A

DRAWN BY: SH

ADAM ARCHITECTURE

OLD HYDE HOUSE, 75 HYDE STREET
WINCHESTER, HAMPSHIRE, SO23 7DW
TELEPHONE: 01962 843843 FACSIMILE: 01962 843303
www.adamarchitecture.com contact@adamarchitecture.com

LONDON OFFICE: WEST WING SOMERSET HOUSE, STRAND LONDON, WC2R 1LA
TELEPHONE: 020 7841 0140 FACSIMILE: 01962 843303
ADAM ARCHITECTURE IS A TRADING NAME OF ADAM ARCHITECTURE LIMITED