Langford House, Salisbury

This drawing is copyright and is not to be reproduced. The contractor will be held responsible for the accuracy of works involving the setting out and checking of all dimensions on the drawing and on site. Dimensions must not be scaled from this drawing.

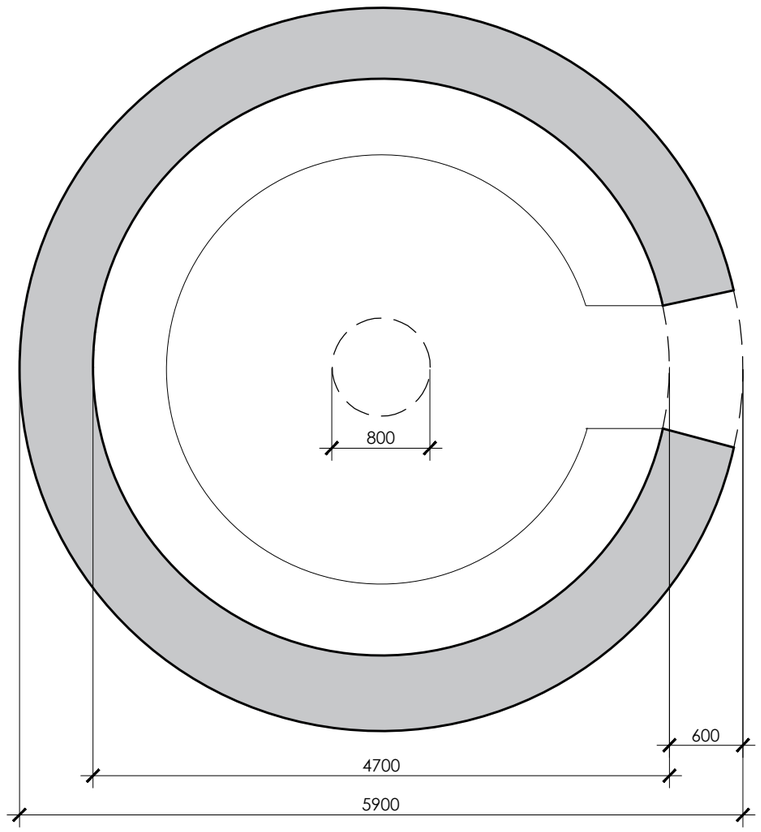

Plan

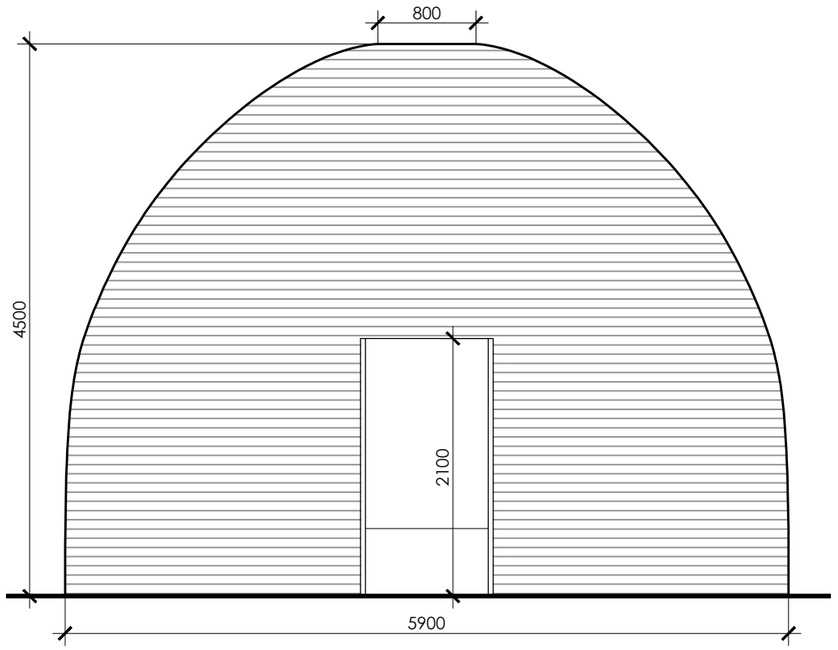

Entry Elevation

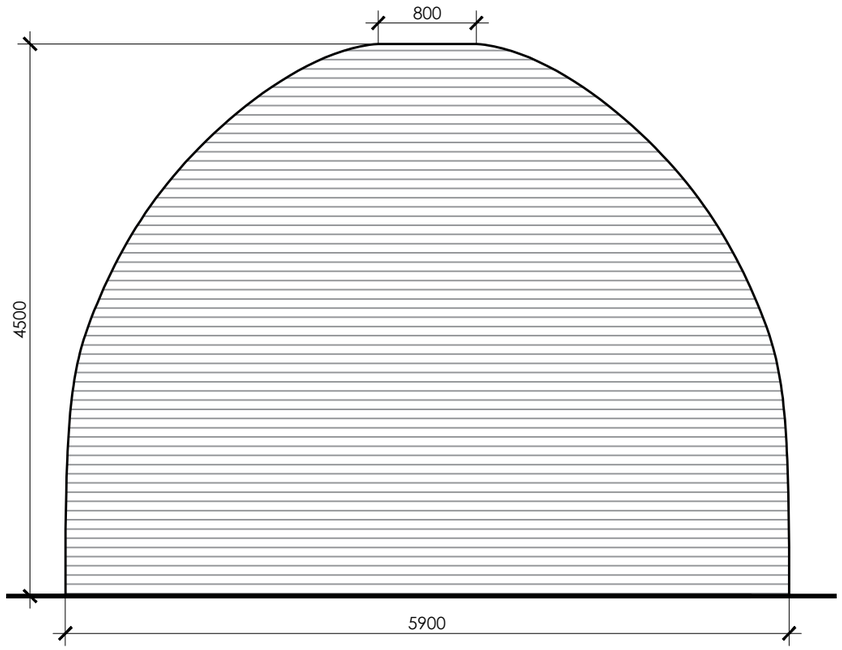

Side Elevation

DRAFT

barclay phillips architects
a: The Studio, 5 Oakridge Office Park, Southampton Road, Whaddon, Salisbury, SP5 3HT
e: enquiries@barclay-phillips.co.uk
t: +44 (0) 1722 711177
www.barclay-phillips.co.uk

PROJECT:
Retrospective Planning Application at: Langford House, Duck Street, Steeple Langford, Salisbury, SP3 4NQ

CLIENT:
Nicholas Yeomans

DRAWING TITLE:
Existing Outbuilding Plans

0 1 2

SCALE: 1:50@A3

DATE: Sept 2023

DRAWING No. P23-052 01-91-001

DRAWN BY: JC

CHECKED BY: DW