Harvest the Sunshine



Mono

375W MBB Half-Cell Black Module

JAM60S21 355-375/MR Series

Introduction

Assembled with multi-busbar PERC cells, the half-cell configuration of the modules offers the advantages of higher power output, better temperature-dependent performance, reduced shading effect on the energy generation, lower risk of hot spot, as well as enhanced tolerance for mechanical loading.

- Higher output power
- Lower LCOE
- Less shading and lower resistive loss
- Better mechanical loading tolerance

Superior Warranty

- 12-year product warranty
- 25-year linear power output warranty

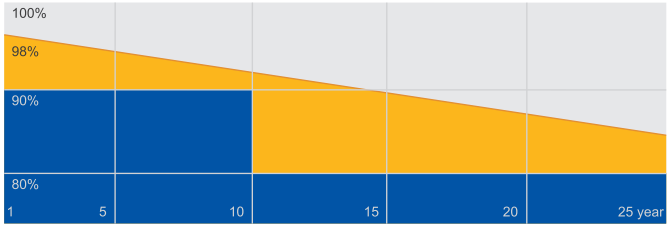

Comprehensive Certificates

- IEC 61215, IEC 61730,UL 61215, UL 61730
- ISO 9001: 2015 Quality management systems
- ISO 14001: 2015 Environmental management systems
- ISO 45001: 2018 Occupational health and safety management systems
- IEC 62941: 2019 Terrestrial photovoltaic (PV) modules - Quality system for PV module manufacturing

Specifications subject to technical changes and tests.
JA Solar reserves the right of final interpretation.

JA SOLAR

JAM60S21 355-375/MR Series

MECHANICAL DIAGRAMS

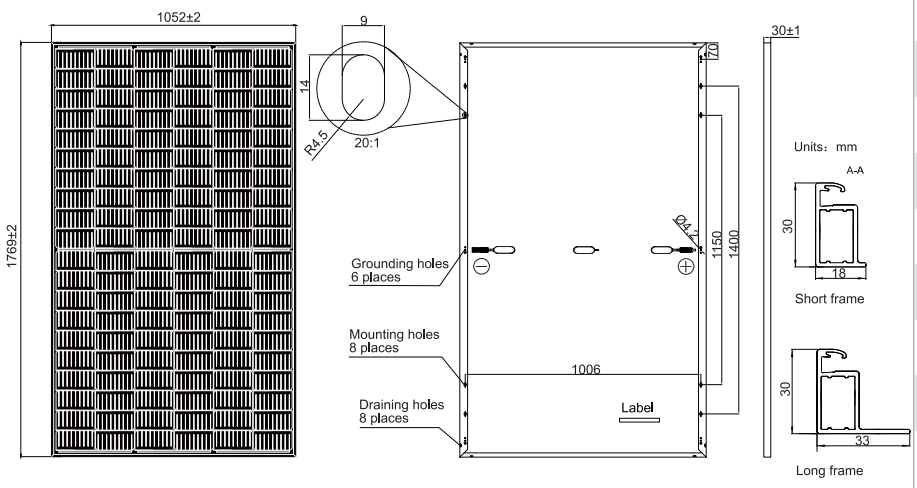

Remark: customized frame color and cable length available upon request

SPECIFICATIONS

Cell	Mono
Weight	20.2kg
Dimensions	1769±2mm×1052±2mm×30±1mm
Cable Cross Section Size	4mm²（IEC）,12 AWG(UL)
No. of cells	120(6×20)
Junction Box	IP68, 3 diodes
Connector	MC4-EVO2/ QC 4.10-35
Cable Length (Including Connector)	Portrait:200mm(+)/300mm(-); Landscape:1000mm(+)/1000mm(-)
Packaging Configuration	36pcs/Pallet 936pcs/40HQ Container

ELECTRICAL PARAMETERS AT STC

TYPE	JAM60S21 -355/MR	JAM60S21 -360/MR	JAM60S21 -365/MR	JAM60S21 -370/MR	JAM60S21 -375/MR
Rated Maximum Power(Pmax) [W]	355	360	365	370	375
Open Circuit Voltage(Voc) [V]	40.80	40.97	41.13	41.30	41.45
Maximum Power Voltage(Vmp) [V]	33.34	33.65	33.96	34.23	34.50
Short Circuit Current(Isc) [A]	11.20	11.25	11.30	11.35	11.41
Maximum Power Current(Imp) [A]	10.65	10.70	10.75	10.81	10.87
Module Efficiency [%]	19.1	19.3	19.6	19.9	20.2
Power Tolerance	0~+5W				
Temperature Coefficient of Isc(α_Isc)	+0.044%/°C				
Temperature Coefficient of Voc(β_Voc)	-0.272%/°C				
Temperature Coefficient of Pmax(γ_Pmp)	-0.350%/°C				
STC	Irradiance 1000W/m², cell temperature 25°C, AM1.5G				

Remark: Electrical data in this catalog do not refer to a single module and they are not part of the offer.They only serve for comparison among different module types.

ELECTRICAL PARAMETERS AT NOCT

TYPE	JAM60S21 -355/MR	JAM60S21 -360/MR	JAM60S21 -365/MR	JAM60S21 -370/MR	JAM60S21 -375/MR
Rated Max Power(Pmax) [W]	268	272	276	280	284
Open Circuit Voltage(Voc) [V]	37.95	38.18	38.41	38.65	38.89
Max Power Voltage(Vmp) [V]	31.58	31.82	32.05	32.30	32.55
Short Circuit Current(Isc) [A]	9.05	9.10	9.15	9.20	9.25
Max Power Current(Imp) [A]	8.50	8.55	8.61	8.66	8.71
NOCT	Irradiance 800W/m², ambient temperature 20°C, wind speed 1m/s, AM1.5G				

OPERATING CONDITIONS

Maximum System Voltage	1000V/1500V DC
Operating Temperature	-40°C~+85°C
Maximum Series Fuse	20A
Maximum Static Load,Front	5400Pa（112 lb/ft²）
Maximum Static Load,Back	2400Pa（50 lb/ft²）
NOCT	45±2°C
Safety Class	Class II
Fire Performance	UL Type 1

CHARACTERISTICS

Current-Voltage Curve JAM60S21-365/MR

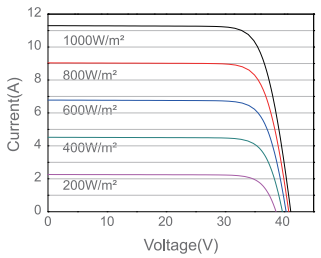

Power-Voltage Curve JAM60S21-365/MR

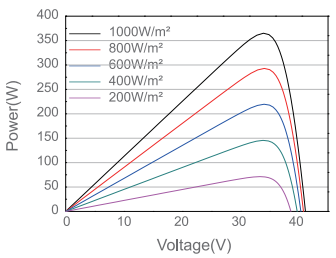

Current-Voltage Curve JAM60S21-365/MR

