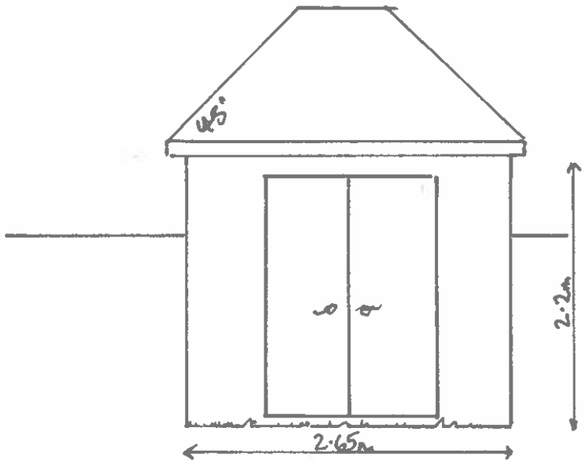

South elevation

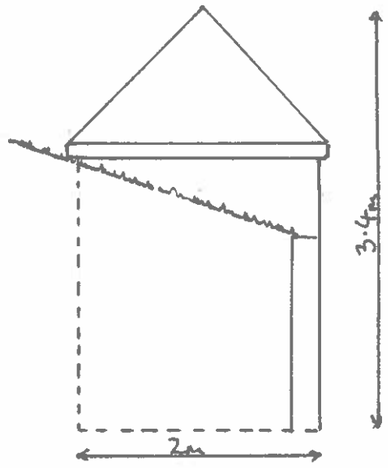

west elevation

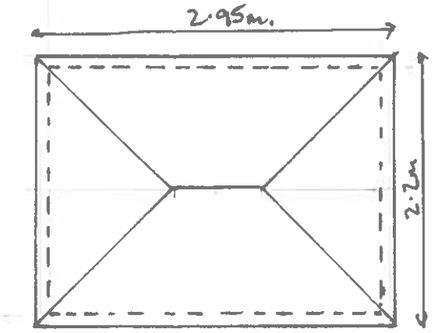

Roof Plan.

north elevation

East elevation

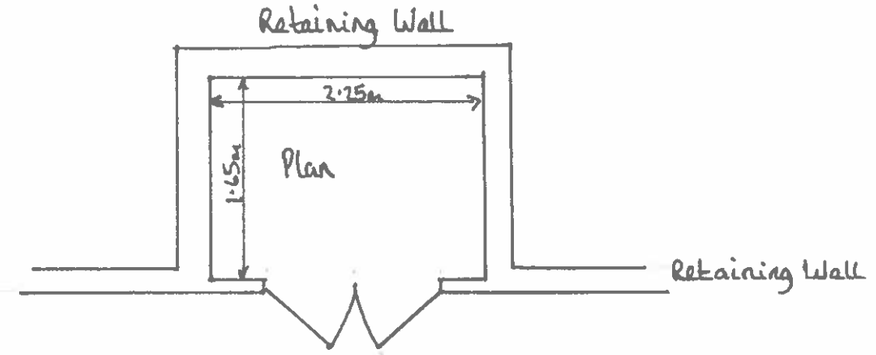

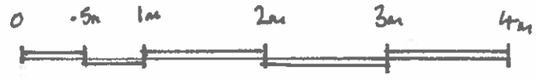

Drawing No CH008 (SHED)

Scale 1:50

Darren Hill SN10 5PN - 70 Court Hill

SHED / OUT BUILDING