DETAIL A | 2 modules in portrait fixed panels structure side view
M 1:50@A3

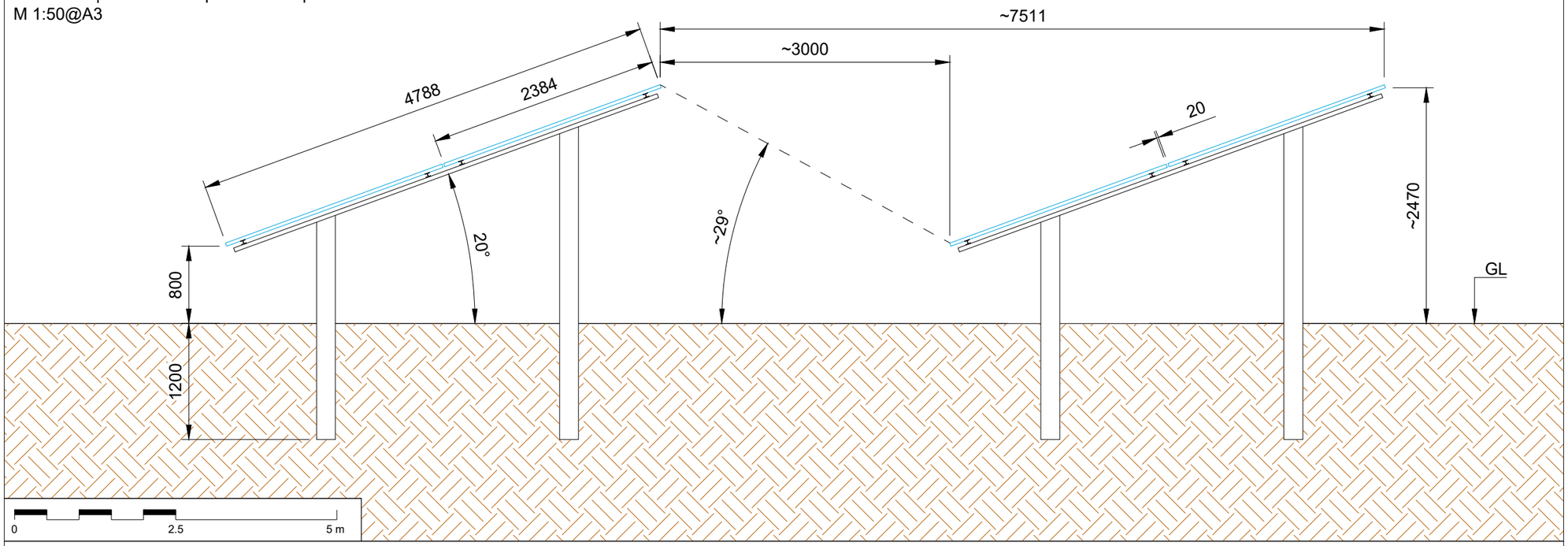

DETAIL B | 2P28 top view
M 1:200@A3

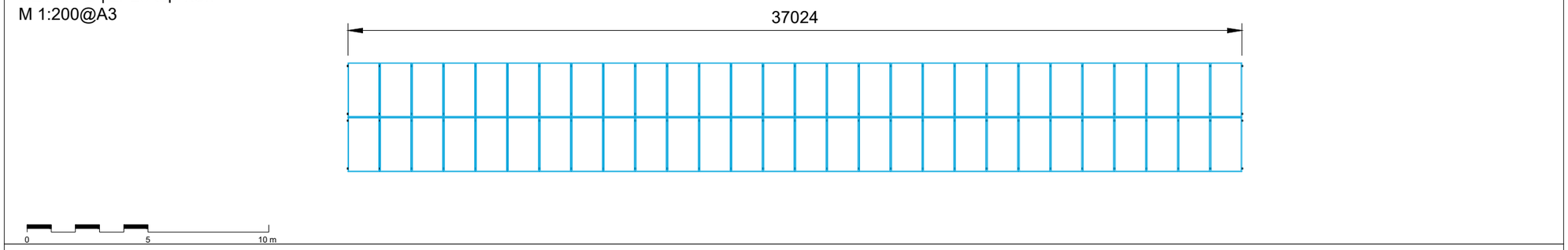

DETAIL C | 2P14 top view
M 1:200@A3

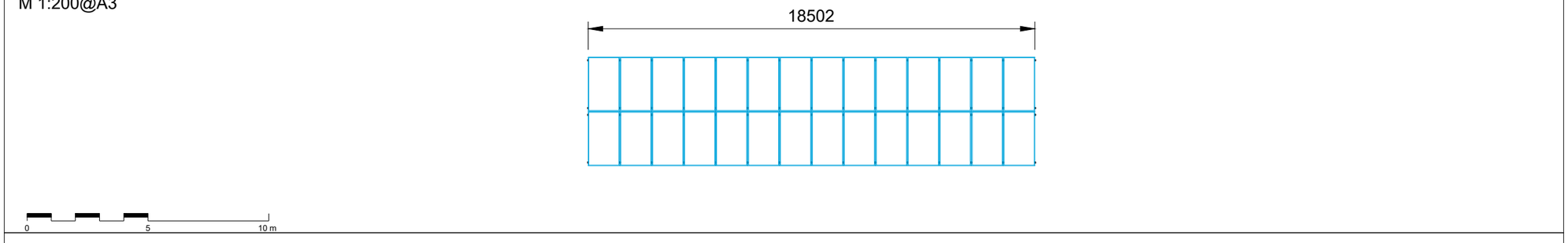

DETAIL D | 2P28 front view
M 1:200@A3

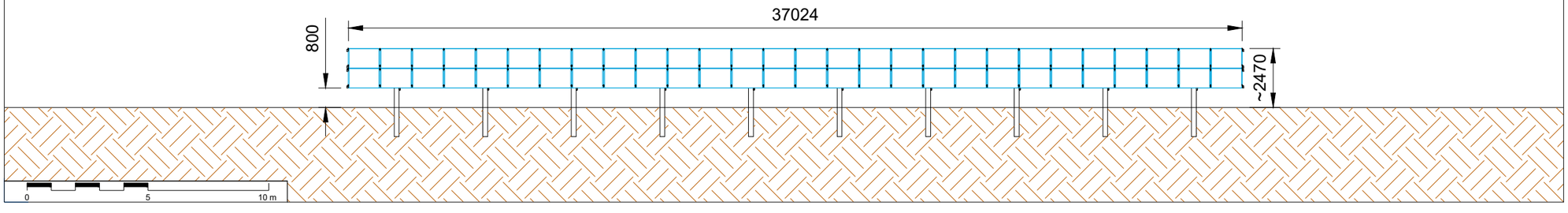

For Planning

Notes:

1. All measurements are in mm unless otherwise specified.
2. This drawing presents an indication of the final installation design anticipated for the project, in terms of design principles and key geometry. The final design and resulting detail will be developed in accordance with the principles of this indicative design, but is anticipated to incorporate reasonable variations, following the standard process of undertaking detailed physical site investigations, detailed engineering analysis and competitive procurement of final equipment.

Revisions:

Rev	Date	Comments	Drawn	Approve
0	06/30/23	First issue	NM	DB

Location: Kington St. Michael,
Chippenham,
United Kingdom
51°30'7.15"N 2°7'58.10"W

Title: Fixed-tilt array details (2P)

Drawn:	DETRA / NM	Checked:	RW
Scale:	As shown	Date:	14/09/23
Drawing No:	EDR1008-202	Rev:	0

EDEN RENEWABLES

The Barn, Ford Farm,
Aldbourne, Marlborough, SN8 2DP, UK
Phone: +44 (0)1672 216239
Email: communityuk@edenrenewables.com
www.uk.edenrenewables.com

Scale for planning purposes only. Site verify all dimensions prior to construction. Report all discrepancies to the drawing originator immediately. This drawing is to be read in conjunction with all relevant documents and drawings.