Alexander Associates
Consulting Civil & Structural Engineers

Alexander Associates (Salisbury) Ltd
62 St. Edmund's Church Street
Salisbury
Wiltshire SP1 1EQ
T. 01722 337327
E. admin@aasalisbury.co.uk
W. www.aasalisbury.co.uk

1st February 2022

Our ref: SJ/sjj/21002-24
Please quote our reference when replying

Aspire Defence Service Ltd.
Tidworth

For the attention of Brad Young

By Email

Dear Brad

RE: BUILDING JE 0 057, TIDWORTH GARRISON

Further to your instructions to inspect the copings to the jack walls of the above building following the inspection in October 2021, I report as follows:

1.0 Introduction

1.1 The inspection was carried out by Stephen James of Alexander Associates on 6th January 2022. The weather was bright and cold.

1.2 This report is an appendix to the earlier professional appraisal prepared in October 2021.

1.3 Access scaffolding was provided to enable a close up inspection of the copings on one of the jack walls.

2.0 Description

2.1 The coping stones are 330mm wide and 100mm thick and have lengths varying up to 1.8m.

2.2 Each coping and the kneeler stone has a drip feature in the overhang to the jack wall. They are of either Chilmark or Bath stone. The bedding of the stone lies parallel to the dressed top surface on some stones and vertically on others judging by the way delamination has occurred.

2.3 The coping stones sit directly on a bed of mortar on top of the sloping wall.

2.4 The coping stones appear to be linked with a piece of shaped slate (slate butterfly) acting as a key between stones.

3.0 Condition

3.1 The inspection was limited to a single jack wall, WS / WN, as noted in the professional appraisal previously issued. As such, whilst the comments may be transferred to the other jack walls, as they haven't been closely inspected, this may not be the case.

3.2 It is not entirely clear why the WS coping stones have slipped down the top of the jack wall but the top stone was connected to the top chimney stone with a slate butterfly which has broken, and this may originally have provided sufficient

CORE SERVICES

Structural Engineering
- structural design
- investigations and surveys
- historic and listed buildings advice

Civil Engineering
- design of roads, drainage and structures
- project management

Ground Engineering
- investigation, analysis and design
- foundations and ground improvement solutions

Registered Office:
Alexander Associates (Salisbury) Ltd
62 St. Edmunds Church Street
SALISBURY
Wiltshire SP1 1EQ
T. 01722 337327
E. admin@aasalisbury.co.uk
W. www.aasalisbury.co.uk

Company Registration No. 10844737
(England & Wales)
VAT reg no. 275 2445 93

ace consultancy engineering business environment
SafeContractor APPROVED
Constructionline Silver Member

restraint along with the friction with the bedding mortar to prevent such slippage (Fig 1).

3.3 The kneeling stone on WS was removed and the wall inspected (Figs 2 to 4).

3.4 The drip feature to the underside of the coping stones is vulnerable to frost damage and this has proved to be the case in a number of the stones inspected where either stone had been lost or could be removed easily (Figs 5 to 9).

3.5 These edges will need to be checked on all the jack wall coping stones.

3.6 The cracks in the chimney are about 2 or 3mm in width and appear to be of longstanding (Figs 10 and 11).

3.7 Whilst on site, and given the improved access, corrosion to the top of the columns could be seen (Figs 12 and 13) leading to distortion of the steel angle clamping plates and possible fracturing of the column capitals.

3.8 There are numerous instances of embedded ironwork in the brick walls which will eventually lead to damage of the brickwork as they corrode and expand, as they have done elsewhere (handrails for example)(Figs 14 and 15).

4.0 Conclusions and Recommendations

4.1 The coping stones to the jack walls are of stone masonry and are largely in good condition although the drip edges should be checked on each one on the building and by extension of similar buildings.

4.2 The stones, ideally, should be repaired to reinstate the drip feature and as secondary line of defence against water ingress, the stones should be re-laid on a lead damp proof course with a stainless steel angle at each joint to restrain the stones from sliding down the jack wall. See our drawing 21002-24/01. Please note that as the jack walls are solid masonry, there is still a risk of moisture transmission through the wall to the walls beneath.

4.3 In lieu of repair the stones could be dressed back to sound stone, and re-laid on mortar and lead damp proof course as above but it will increase the risk of the top of the jack wall becoming damp and transmitting that moisture internally.

4.4 The cracks to the chimney appear to be of longstanding and could be repaired by either replacing cracked bricks or resin fixing them together. Open mortar joints can be made good by repointing to at least 20mm depth using a mortar to match the existing.

4.5 The corroding steel brackets at the column capitals should be removed and cleaned of corrosion and treated prior to re-installing. Any damaged cast iron capitals may need repair.

4.6 Other embedded ironwork should be removed carefully from the brickwork, so as to do less damage than the ironwork might do over time.

Please note that there was limited opening up as the stones could not be moved other than the kneeling stone. However, the opening up that did take place enabled the construction of the top of the jack wall to be observed and recorded.

I have spoken with Colin Avery (colin@averystonemasons.com) and have discussed the proposed repairs with him, too. His contact number is 07775 698208.

If you have any queries regarding the contents of this report, please do not hesitate to contact me.

Yours sincerely

[redacted]

STEPHEN JAMES
BSc(Hons) MBA CEng MICE MIStructE

Encs: Photographs



Fig 1 Broken slate butterfly.



Fig 2 Displaced kneeler stone.



Fig 3 Underside of kneeler stone showing drip detail.



Fig 4 Top of jack wall where kneeler stone removed.



Fig 5 Delaminating stone at WS.



Fig 6 Note length of stone easily removed at WS.



Fig 7 Vertical laminations at drip detail - WN.



Fig 8 WN after removal of delaminating stone.



Fig 9 Stone removed from WN.



Fig 10 Vertical crack in W chimney.



Fig 11 Stone slabs incorporated into chimney with vents.



Fig 12 Corroding angle plate at column capital.



Fig 13 Possible fracture at rear of column capital?



Fig 14 Embedded ironwork.



Fig 15 Embedded ironwork.

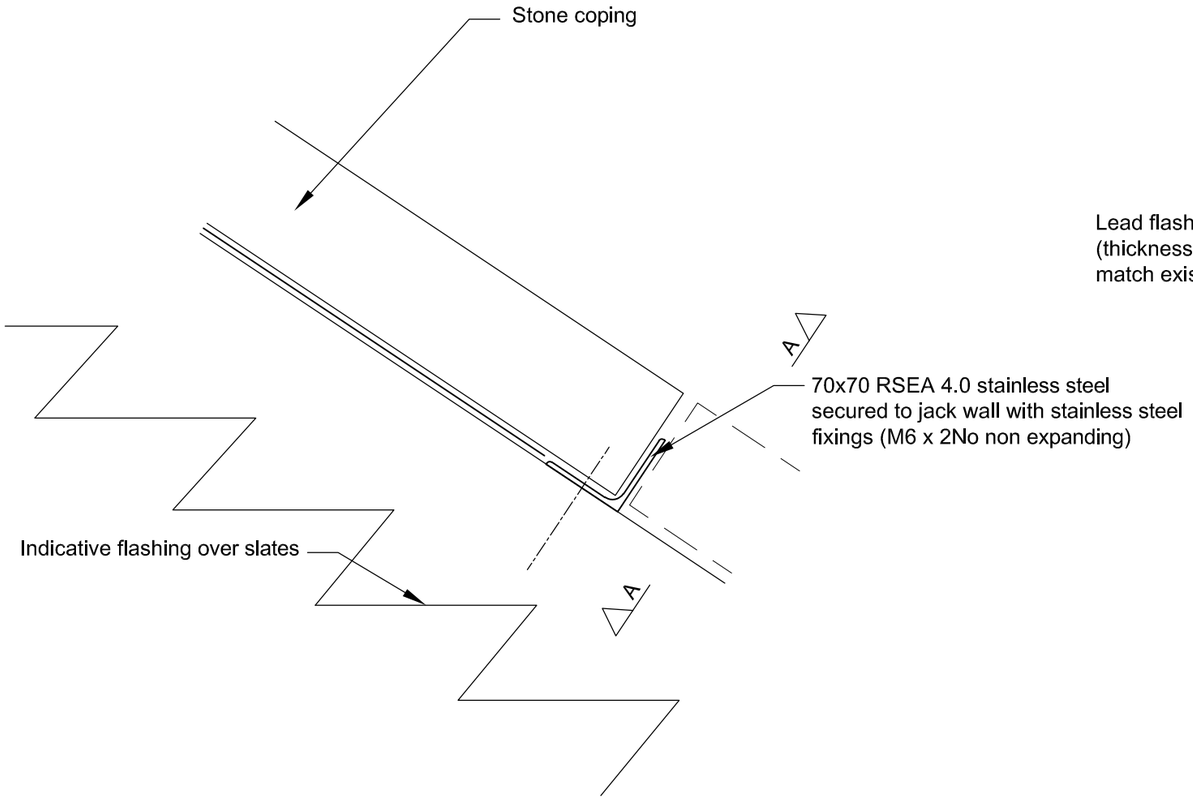

Elevation

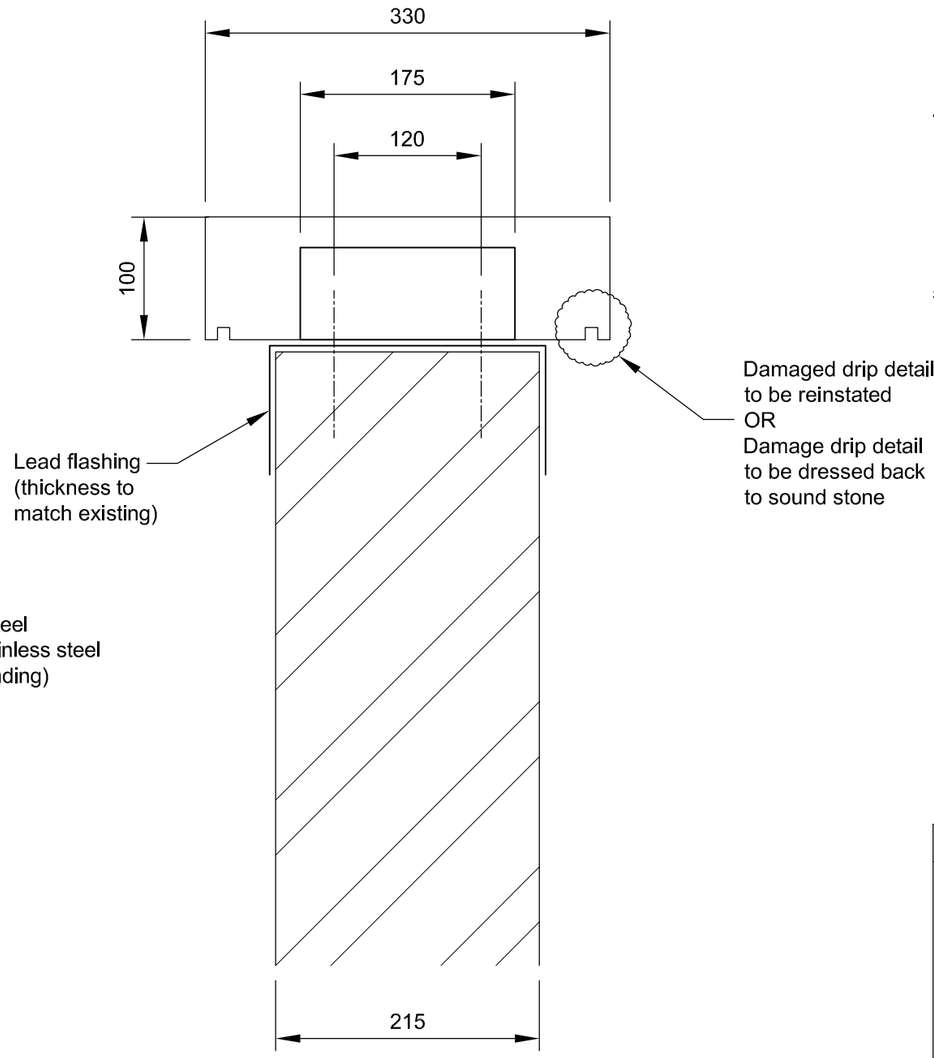

Section A - A

Notes:

1. Do not scale from this drawing.
2. All dimensions indicated are in millimetres.
3. This drawing should be read in conjunction with all other relevant Engineers, Architects and specialist drawings and any specification.
4. All building materials, components and workmanship to comply with Building Regulations, Eurocodes, British Standards and Codes of Practice and the appropriate manufacturers recommendations.
5. Any discrepancies errors or omissions to be reported to the Engineer, if in doubt ask.

Rev.	Details	Drawn / Chkd.	Date

Project

JE 0 057
Tidworth Garrison

Title

Roof Repairs
Copings

ALEXANDER ASSOCIATES
62 St. Edmunds Church Street
Salisbury
Wiltshire
SP1 1EQ

Tel: (01722) 337327
E-mail: admin@aasalisbury.co.uk
Web: www.aasalisbury.co.uk

Scale @A3	Date	Drg. No.	Rev.
1:5	Jan 22	21002-24/01	-
	Drawn: RJJ / Chkd: SJJ		