KEY

1. MAIN BEAM
2. RAFTER
3. STRUT
4. POST
5. TOP RUNNER
6. LINE OF TRANSPARENT ROOF
7. LINE OF GUTTER

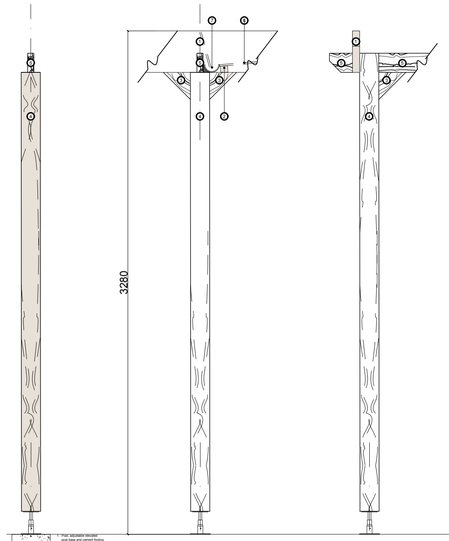

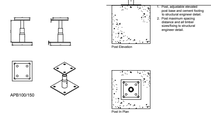

1. Post, adjustable elevated post base and cement footing to structural engineer detail.
2. Post maximum spacing distance and all timber sizes/fixing to structural engineer detail.

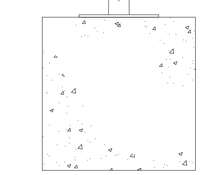
Post In Plan

Post Elevation

EXTERNAL PERGOLA

- Rear PERGOLA to be formed using external grade heavy duty slow grown spruce or similar approved.
- Pergola to be formed using treated timber obtained from well-managed forests and/ or plantations.
- All rafters and runners to be slotted to form halved joints with secret or countersunk screw and pellet fixings. All posts and rafters to be supported with suitable angled brace structure.
- Posts to be mounted on Adjustable Elevated Post Base on a relevant cement footing. Mounting plate on a screw allowing it to be adjusted to a specific standoff height within 100-150mm tolerance where required.
- All structural Timber dimensions and base/footing details to be provided by structural engineer.
- No side panels formed
- Pergola to be formed over existing and new base material on site.

ROOF STRUCTURE

- Transparent Polycarbonate roof laid to minimum falls to achieve rain water dispersion. Roof to be installed at a minimum pitch subject to advice from the polycarbonate supplier (Note; Different types of roofing require different pitch).
- UV Rated polycarbonate
- Check for the UV protected side. This side must be installed on the top side of the roof facing skyward unless product has UV coating on both sides, 50/50.
- 10 millimeter polycarbonate twin wall. Note should the rear of the venue be particularly susceptible to wind and rain a 16 millimeter polycarbonate triple wall may be considered.

ILLUMINATION

- Internally the Pergola roof to be fitted with LED outdoor IP65 rated pontoon lighting or similar approved.

GUTTER

- Gutters to be fitted to the Pergola and Gutter Water Butt Down Pipe
- Water Butt including Tap and lockable lid

PLANTING

- Pergola to feature hanging plants to designers specification
- Pergola to feature freestanding planters and rope divider to designers specification

General Notes Joinery
Surface Spread of Flame: Surface finishes or coverings on walls should not promote the spread of fire.
An appropriate Certificate of Supply to satisfy the legislation with regard to this specific installation should be provided by the flame-retardant supplier.
Purpose made joinery standard notes.

Fabrication
Standard: to BS 1186-2
Sections: accurate in profile and length, and free from twist and bowing. Formed out of solid.
Machined surfaces: smooth and free from tearing, wooliness, chip bruising
Joints: tight and close fitting
Screws: provide pilot holes; provide countersunk screws at least 2mm below surfaces visible in completed work.
Adhesives: compatible with wood preservatives
Cross section dimensions of timber:
General: dimensions on drwg are finished sizes all dims to be confirmed on site

Preservative treated wood
Cutting and machining: completed as far as possible before treatment
Extensively processed timber: retreat timber sawn lengthways, thickness, planed
Surfaces exposed by minor cutting and/ or drilling: fill & polish out

Moisture content
Wood and wood-based products: maintained within range specified for the component during manufacture and storage

Finishing
Surfaces: smooth, even and suitable to receive finishes
Arrises: eased unless shown otherwise on drawings.
End grain in external components: sealed with primer or sealer and allowed to dry before assembly

Please review the mode of delivery to the building with the manager prior to manufacture/delivery.

Accessories/ Special requirements: Submit final shop drawings for approval.

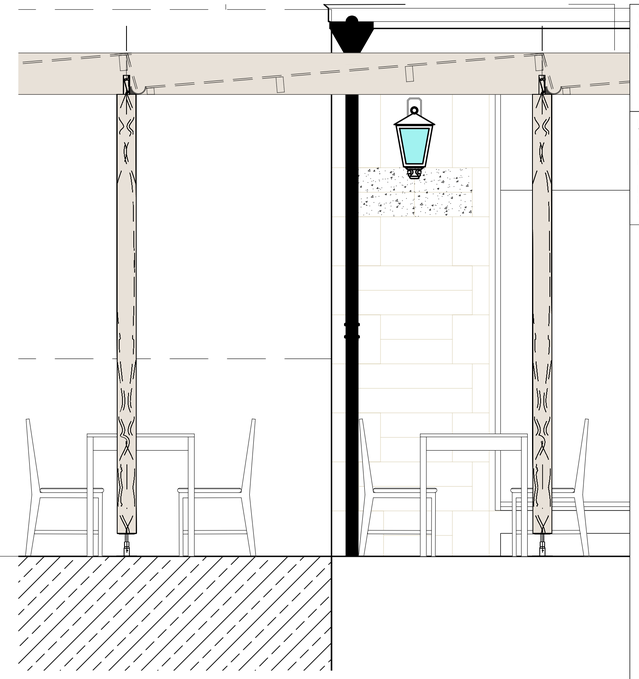



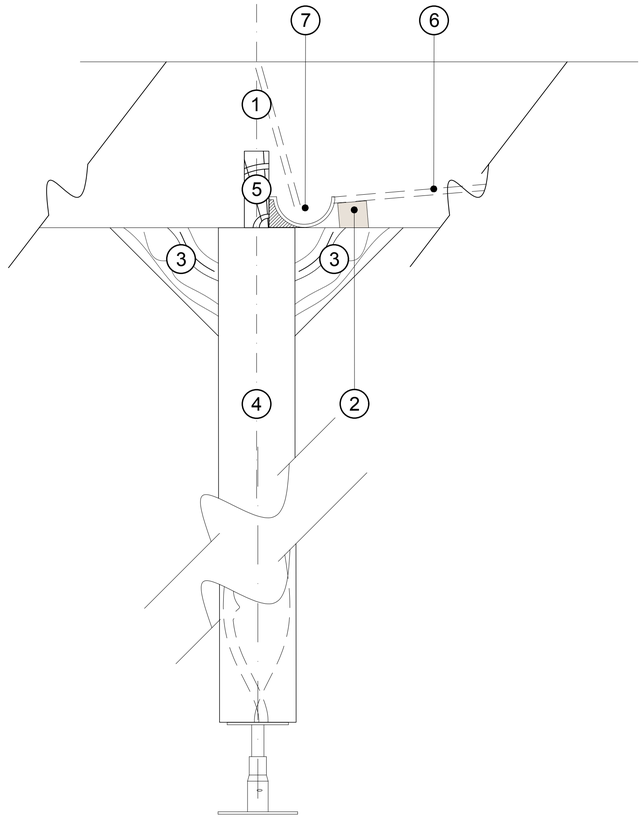

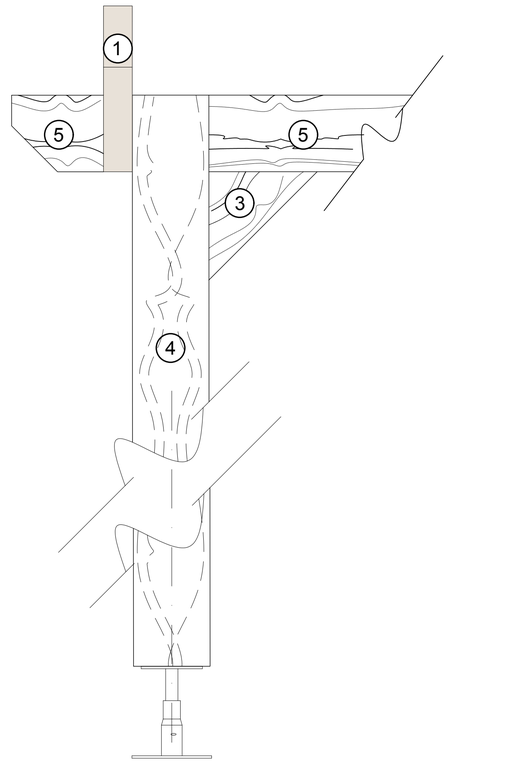

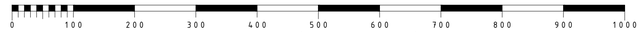

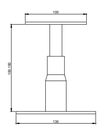

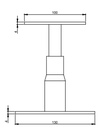

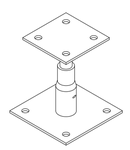

This drawing, design & all information contained herein remains the sole copyright of CONCORDE BGW & reproduction in any form is strictly forbidden unless permission is obtained in writing.

NOTES:
- Do not scale from this drawing, all dimensions must be checked on site. The contractor must verify all site dimensions, drawings, details & specifications. Any discrepancies must be reported to CONCORDE BGW prior to any commencement of work.
- Figured dimensions to take preference over those scaled.
- All specified items are to be installed in accordance with the manufacturers recommendations & instructions.

© Copyright

DISCLAIMER

A full and accurate measured survey has not been undertaken by Concorde BGW at this site. This drawing has been produced from information provided by others. Any dimensions indicated are for information only and must be checked on site prior to the commencement of any works

Rev:	Date:	Init:	Note:	© Copyright
			-	

Stage: PLANNING

Client: BUTCOMBE BREWERY

Project address:
NORTHEY ARMS
BATH ROAD
CORSHAM
BOX
SN13 8AE

Title: PERGOLA DETAIL

Scale:	1:20 & 1:5	Dwg size:	A1
Drawn by:	dn	Date:	Sept 23
Drawing no:	4775-09-04	Rev:	-

CONCORDE BGW GROUP

London
TOG Albert House
256-260 Old Street
Shoreditch, London
EC1V 9DD

Doncaster
Palmer Street
Hyde Park
Doncaster
DN4 5DD

Nottingham
Unit 3, The Glade
Business Centre
Forum Road
Nottingham
NG5 9RW

01302 361 024 **concordebgw.com**