DALCOUR MACLAREN

Arboricultural Survey

Client: Southern Electric Power Distribution
Date: September 2023
Scheme: Sandridge 132/33kV Substation Extension

© Dalcour Maclaren 2023

dalcourmaclaren.com

Project Details

Project Name	EP – Snarlton Lane
Scheme Number	23007928
Report Number	001

Prepared by	
Name	Alex Finn (Treetec Consultancy Limited)

Approved by	
Name	Kate Drewett (Senior Environmental Planner)

Contents

1 Introduction....4
1.2 Scope....4
1.3 Personnel....5
1.4 Brief Site Description....5
1.5 Protective Status of Trees....5
2 Methodology....7
3 Plans....8
3.1 Tree Constraints Plan....8
3.2 Tree Protection Plan....8
4 Proposed Work....9
5 Observations....10
6 Tree Survey....12
7 Arboricultural Impact Assessment....13
7.2 Trees to be removed due to the development....14
7.3 Trees to be retained but are in the influence of the development....14
7.4 All remaining surveyed trees....14
8 Summary of Constraints to be Addressed by the AMS....16
9 Scheduling of Work....17
10 Summary and Conclusions....18
11 Closure....19
Appendix 1 – Cascade Chart for Tree Quality Assessment....20
Appendix 2 – RPA Protective Fence Detail....21
Appendix 3 – Extract from NJUG Guidelines for the Planning, Installation and Maintenance of Utility Apparatus in Proximity to Trees....22
Appendix 4 - BS5837 Recommendations for the use of Scaffolding within the Root Protection Areas (RPA's) of trees-(temporary ground protection)....26
Appendix 5 – Glossary of Terms....27

Drawings

Drawing No.	Title	Scale
23007928_PLN_TCP_1.1	Tree Constraints Plan	1:2500 @ A3
23007928_PLN_TPP_2.1	Tree Protection Plan	1:2500 @ A3

1 Introduction

1.1.1 Treetec Consultancy Limited (Treetec) has been instructed by Dalcour Maclaren on behalf of Scottish and Southern Electricity Networks (SSEN) to assess and mitigate against the impact of proposals for an access route and upgrade of the existing solar farm adjacent to an area of mature woodland.

1.1.2 Its aim is to identify and minimise any possible damage to the health of existing trees within the influence of the trees during and after the construction period. It is understood that the access route will not only be used for construction traffic but also thereafter for access for maintenance vehicles.

1.1.3 This will be by means of an Arboricultural Impact Assessment (AIA) which summarises how SSEN will safeguard the roots of trees within the influence of the works, whilst the installation works are implemented.

1.1.4 An Arboriculturist from Treetec visited the site on 25th July 2023 and surveyed all the significant trees which are considered at risk of being influenced by the proposed work.

1.1.5 The weather conditions were dry and sunny during the site survey.

1.2 Scope

1.2.1 British Standard BS5837:2012 "Trees in relation to design, demolition and construction, Recommendations" has been used as the basis for the assessment. The information contained in this survey will be used to ensure that the decisions made in respect of future development proposals consider the tree resource.

1.2.2 It is important this survey is referred to prior to the commencement of any works. The main priority being the protection of those trees identified within this repo which are of amenity value or are found to be in third party ownership, and/or where they are found to be designated with a Tree Preservation Order (TPO) or other designations.

1.2.3 Based on the information and instruction provided by the client, trees considered to be outside the zone of influence of the development have not been included in the survey and are not recorded on the associated tree survey plans.

1.2.4 Where there are trees which have not been included on the original base topographical survey and it has been thought necessary to include them, then these have been marked onto the tree survey plans in their approximate positions only and marked "AP" (Approximate Position). The positions of these trees should therefore be used for reference and general guidance only.

1.2.5 If it is thought there is a danger that the works could influence the tree's health, then it will be necessary to carry out further surveying work to confirm their exact positions in relation to the development.

1.3 Personnel

1.3.1 This report has been prepared by Alex Finn, Principal Arboriculturist at Treetec Consultancy Limited.

1.4 Brief Site Description

1.4.1 The site is located approximately 4km to the east of the town of Melksham in Wiltshire. It comprises of a large solar farm covering an area of approximately 78 hectares. It is accessed from a layby on the south side of the A3102 public highway.

1.4.2 The internal areas of the site are covered with solar panels and are relatively treeless with some managed hedgerows sectioning off the panels into several compartments . Small, wooded areas are found adjacent to the farm on all the boundaries apart from the southern boundary.

1.4.3 Several compacted farm tracks are located within the solar farm, to service the facility, with a substation complex located in the northeastern sector.

1.5 Protective Status of Trees

1.5.1 Trees may legally be protected by a Tree Preservation Order (TPO) or by the fact that they are located within a Conservation Area.

1.5.2 There is a potential for unlimited penalties to be attracted for illegally carrying out works on protected trees without formal permission to do so.

1.5.3 Information supplied by reference to Wiltshire Council's Web page on 26/09/2023 has confirmed that the site is not located within a Conservation Area and is not subject to any TPOs. (reference wiltscouncil.arcgis.com).

1.5.4 It is also recorded that the adjacent woodland to the site, known as Eighteen Acre Plantation is not designated as a ASNW (reference magic.defra.gov.uk).

1.5.5 Where important hedgerows, or sections of important hedgerows are to be removed and this has not been approved during the planning process, it will be necessary to notify the LPA by submitting a Hedgerow Removal Notice as required by the 1997 Hedgerow Regulations.

1.5.6 Not all hedgerows are considered as important, and it is advised that further reference to the Hedgerow Regulations 1997 is consulted in the first instance.

1.5.7 It should also be noted where it is intended to fell in excess of 5 cubic metres of timber in any calendar quarter it will be necessary to obtain a Felling Licence from the Forestry Commission. There are some exemptions to this regarding dead, dying and dangerous trees and this will only be necessary prior to planning consent or where planning consent is given but there is a change in the proposals.

2 Methodology

2.1.1 All of the trees in this survey have been assessed from ground level individually with the aid of the Cascade Chart for Tree Quality Assessment BS 5837:2012 (see Appendix 1).

2.1.2 Trees that have been recorded have been given a reference number which can be found within the Tree Survey (refer to Section 6) and on the supplied drawings.

2.1.3 Assessment is based mainly around the useful life expectancy of the tree(s) and their condition and contribution (amenity value) to the area, which has been categorised using four letters and four colours, the values of which are shown on the (Appendix 1) Cascade Chart for Tree Quality Assessment. The letters have then been divided further using one to three sub-categories under one of three sub-headings.

2.1.4 All the colour categories and reference numbers have been marked onto the Tree Constraints Plan (TCP) and the Tree Protection Plan (TPP).

2.1.5 Branch spread in general has been measured on four sides and recorded together with confirmation on which side of the tree the measurement was taken.

2.1.6 Stem diameters have been generally measured at 1.5m above ground.

2.1.7 Current tree heights have been measured using a SUUNTO Height Meter PM-5/1520, serial number 823208, except where trees are inaccessible when estimated measurements will have been recorded.

2.1.8 Where due to local constraints i.e. impenetrable vegetation or trees located in private properties, and it is not possible to gain direct access to the trees, field data will have been estimated and are referenced by a letter rather than a number.

2.1.9 If base topographical plans are not available or additional trees are added, it will sometimes be necessary to calculate the approximate position of these trees. Where this occurs trees will be marked with the letters “AP” (Approximate Position).

2.1.10 Where groups of trees or areas of woodland are surveyed, average measurements have been recorded in respect of crown spread and height. However in order to calculate an adequate linear RPA, the largest stem measurements have been taken from the trees closest to the development.

3 Plans

3.1 Tree Constraints Plan

3.1.1 The Tree Constraints Plan (TCP) shows the RPAs for each tree or group of trees. These areas are normally calculated using the tree's trunk diameter which is generally measured at 1.5m above ground level. However, as these woodlands are classified as ASNW, it is required to have a minimum of a 15m RPA. This has therefore been used as the basis of the required protection areas as a linier RPA.

3.1.2 To remove the risk of decline and ensure the survival of the trees, once calculated the measurements provide a minimum area around the tree which should be left undisturbed during the development, referred to as the RPA.

3.1.3 There is some scope to carry out some construction works within the RPA using proven measures; however, these should be avoided if possible.

3.1.4 Where these methods are required, they will be recommended within an Arboricultural Impact Assessment (AIA) and detailed within an Arboricultural Method Statement (AMS), which will be required once the development design has been finalised and planning permission has been consented where applicable.

3.1.5 Where tree canopies extend further than the RPA, care will be needed not to damage these during construction. Some pruning back will have to be assessed and accommodated where this is an issue. All work must only be carried out after further assessment and advice from the project Arboriculturist and in accordance with BS 3998:2010 "Tree work Recommendations" or latest research and revisions.

3.2 Tree Protection Plan

3.2.1 A Tree Protection Plan (TPP) has been included with this report which is represented as a draft plan on a separate plan to the TCP. This plan shows the precise location and specification of the erection of protective barriers and any other relevant physical protection measures including ground protection to protect the RPA (construction exclusion zone).

3.2.2 Specifications in respect of recommended protective fencing can be found in Appendix 2 at the end of the report.

4 Proposed Work

4.1.1 The proposed work consists of an extension to an existing substation which is located in the northeast corner of a large established solar farm facility (refer to photo 1 below). Associated works include the possible upgrading of an access track to allow for construction traffic and thereafter maintenance vehicles(refer to photo 2 in section 5 below).



Figure 1: Substation to be extended.

5 Observations

5.1.1 A small woodland or plantation is found to the east of the survey area, being located adjacent to a single width compacted service track currently used for internal access for light maintenance vehicles (refer to photo 2 below). A shallow dry ditch runs the whole length of the woodland between the track and the wood, which is separated further by a barbed wire agricultural fence which is in poor condition.



Figure 2: Single compacted service track.

5.1.2 From reference to the TCP, it is observed that this track is located within the influence of the RPAs of the outer trees of W1, despite the presence of the ditch which most likely will have tree roots extending below it to the west. The recommendations in this survey are precautionary prior to more construction details being confirmed.

5.1.3 The woodland has been treated as a group of trees apart from one English oak tree which is considered to be a veteran (T1) located at the northern end of the woodland(refer to photos 3 and 4 below).



Figure 3: Veteran Tree (T1) within W1.



Figure 4: Veteran tree (T1) within W1.

6 Tree Survey

6.1.1 All the site information used for the assessment and grading of the individual trees and groups has been recorded into the following Tree Survey Table using the Cascade Chart for Tree Quality Assessment BS 5837:2012 (Appendix 1) from which the table template has also been taken.

Table 1: Tree Survey Table.

Tree reference number	Species	Height (m)	Stem diameter (mm)	No of stems	Canopy Spread N (m)	Canopy Spread E (m)	Canopy Spread S (m)	Canopy Spread W (m)	Height of crown clearance (m)	Age class	Physiological condition	Structural condition	Preliminary management recommendations	Estimated remaining contribution	Category grading
T1	English Oak	22	1500	1	0.2	8	7		6.5	OM	Fair	Good	Veteran in slow decline	10+	A1
W1	English Oak	25	1000	1+	7.5	7.5	7.5	7.5	4	M/OM	Good	Good	None	20+	B2

7 Arboricultural Impact Assessment

7.1.1 After identifying the position of the trees and calculating the RPAs, the footprint of the proposed works has been overlaid onto the TCP to enable possible areas of conflict to be identified. Trees which could potentially be impacted upon have been identified using this approach which, where practical, will allow mitigation or changes to the final design layout. Where trees or hedges cannot be retained for any reason, they have been identified for removal on the TCP.

7.1.2 Damage to trees can be commonly caused by:

- Compaction around the trees, causing asphyxiation and a reduction in the availability of water and minerals to the roots;
- Physical damage to the roots by cutting and severing or removal of bark;
- Spillage of contaminants;
- Physical damage to the stem and branches.

7.1.3 The effects of the damage may not be immediately apparent and often it is the case that the tree does not show any symptoms until after the first year. Such symptoms may range from dieback in the crown to deterioration and ultimate death, depending upon the severity of the damage and the ability of the roots to recover and regenerate.

7.1.4 Due to the nature of the work it is likely the health of some of the retained trees will be at risk where RPAs are identified as of being affected due to the one or more of the following activities:

- Change of ground surface levels within RPAs;
- Compaction of soils due to heavy machinery; and
- Low canopies that extend over the “site”

7.1.5 It therefore will be necessary to carry out preventative measures to reduce and mitigate damage to trees which are considered to be of value and are deemed practical to be retained.

7.1.6 All construction activities proposed within RPAs must be deemed as ‘arboriculturally sensitive’ and must be approved for use by a competent Arboriculturist. Where possible works should avoid the need for excavation, except whereby prior agreement with the project Arboriculturist and/or the Local Planning Authority (LPA), where it can be demonstrated any impact is considered acceptable.

7.2 Trees to be removed due to the development

7.2.1 It is established from the TCP that in order to implement the proposed works that it will not be necessary to remove any trees. However, if during the work it becomes apparent that this is necessary then the project Arboriculturist, and a suitable representative from the LPA must be informed. No work must be carried out until further advice is given.

7.3 Trees to be retained but are in the influence of the development

7.3.1 From reference to the TCP, it is established there is a risk of damage to the health of the trees within the adjacent woodland, referenced as W1 and T1, particularly from ground compaction during the development period from heavy vehicles and machinery accessing the construction area, and thereafter maintenance vehicles. It is also recognised that the current track and proposed access route crosses the RPA of an English oak(T1) which is considered as a veteran tree.

7.3.2 It is understood that a civils assessment will be taking place to conclude whether reinforcement works are required to the existing track, and subject to the results from this, appropriate mitigation, if needed, will be detailed within an AMS.

7.3.3 It is also recognised that there are areas of virgin ground outside the hardstanding of the track but are at risk of being impacted upon by the development proposals. These will need to be protected with suitable temporary ground protection to prevent compaction. These areas are marked in yellow on the TPP.

7.3.4 Where there is a risk of accidental intrusion into areas of the RPAs outside the construction areas, these will need to be protected with suitable approved temporary protection fence. (reference to Appendix 2).

7.3.5 Where underground utilities are required, these must be routed beyond the RPAs of trees where possible. Where it is found for any reason that this is not possible, it will be necessary to ensure they are installed in such away as not to cause damage to the health of the trees.

7.3.6 It is therefore essential that guidelines recommended covering all aspects of mitigation where required in an AMS are closely followed, initially under the guidance of the project Arboriculturist.

7.4 All remaining surveyed trees

7.4.1 All the remaining surveyed trees are beyond the direct influence of the construction activities and can be retained without damage to their health, although it will be necessary to ensure protective fencing is adopted to

prevent damage to the branches stems and roots of the trees from machinery.

7.4.2 Vehicular route(s) and the position of storage compound(s), if required, must be discussed, and agreed with the project Arboriculturist prior to any works on site commencing and detailed in an AMS.

7.4.3 It should be generally accepted that these will need to be located well away from the RPAs unless permanent or temporary ground protection is provided, prior to the main construction works commencing.

8 Summary of Constraints to be Addressed by the AMS

8.1.1 Further to this survey it is important that an AMS is prepared which also may be required as a condition of planning permission where applicable. Within this document it will be necessary to confirm construction proposals and detail mitigating construction methodology, where it is required to reduce any adverse effects to the health of trees within or adjacent to the working area(s).

8.1.2 It is established that the following constraints will need to be addressed in detail:

- Details of cutting back of tree canopies, low branches and confirmation of tree removal where there is direct conflict with the working areas;
- Confirmation of access routes and detailed specification for mitigating construction techniques where appropriate such as Cellular Confinement System (CCS) subject to review and conclusions from civils the survey.
- Confirmation and detailed installation methods of underground/overground pipes and services where they conflict with RPAs;
- Confirmation of location of site huts and types of machinery to be used;
- Final positioning of temporary protective fencing and any ground protection;
- Proposed level changes and earthworks if applicable; and
- Details of final landscape works.

8.1.3 All constraints are subject to further reporting from the client.

9 Scheduling of Work

9.1.1 It is essential that a pre-commencement meeting is held on site before any of the construction work begins. This must be attended by the site or project manager/operator, the project Arboriculturist and if requested a Council representative. If a Council representative is not present, where requested the project Arboriculturist must inform the Council, in writing, details of what was discussed and agreed during the meeting.

9.1.2 All tree protection measures detailed in this report must be fully discussed so that all aspects of their implementation and sequencing are understood by all the parties. Any clarification or modifications must be recorded and circulated to all parties in writing. It may be appropriate for the tree surgery contractor to also attend this meeting should it be necessary to carry any identified tree surgery works.

9.1.3 It will be necessary thereafter to monitor and assess the development throughout the construction period. Provided the guidelines are followed then it is considered that trees shown for retention on the TPP can be retained with minimal damage to their health.

Table 2: Guidance of scheduling of works in order to protect trees to be retained.

Timescale	Task	By whom / responsibility
Pre-development approval	Submission of AMS and final TPP (where applicable)	Pre-development approval
Post approval and predevelopment	Pre commencement meeting with all relevant parties Methodology and location of protective fences agreed	To be arranged by the site operator/project manager with project Arboriculturist
Predevelopment	Preliminary tree work specification drawn up, approved and sent for tender.	As above with the project Arboriculturist
Predevelopment	Pre-construction tree work implemented and supervised	As above
Predevelopment	Protective fencing erected	As above
During development	Carry out supervisory visits as agreed and report findings and recommendations	As above
Post development	Inspect retained trees and carry out remedial tree work as necessary.	Post development

10 Summary and Conclusions

10.1.1 It is proposed to provide permanent access and upgrades to the substation at an established solar energy farm at Snarlton Farm in Wiltshire. Due to the presence of semi mature and mature trees the proposed work is likely to directly impact on the health on a small number of trees in close proximity to the proposed works.

10.1.2 Due to the presence of trees which are adjacent to the areas of development it will be a requirement to implement construction mitigation to avoid long term damage to their health. This AIA identifies the areas which will need attention which will depend on further feedback on site survey work currently being undertaken.

10.1.3 It will be necessary to provide a AMS prior to any works commencing on site with detailed mitigation where it is identified as necessary from further investigatory reporting and detailed specifications from the client.

11 Closure

11.1.1 This survey has been prepared by Treetec Consulting Limited with all reasonable skill, care and diligence, and taking account of the manpower and resources devoted to it by agreement with the client. Information reported herein is based on the interpretation of data collected and has been accepted in good faith as being accurate and valid.

11.1.2 This survey is for the use of Dalcour Maclaren Limited and its clients; no warranties or guarantees are expressed or should be inferred by any third parties. This report may not be relied upon by other parties without written consent from Treetec.

11.1.3 Treetec disclaims any responsibility to the client and others in respect of any matters outside the agreed scope of the work.

11.1.4 This survey is valid for 12 months post the initial site inspection and recording of information.

Appendix 1 – Cascade Chart for Tree Quality Assessment

Table 1 **Cascade chart for tree quality assessment**

Category and definition	Criteria (including subcategories where appropriate)			Identification on plan
Trees unsuitable for retention (see Note)				
Category U Those in such a condition that they cannot realistically be retained as living trees in the context of the current land use for longer than 10 years	• Trees that have a serious, irremediable, structural defect, such that their early loss is expected due to collapse, including those that will become unviable after removal of other category U trees (e.g. where, for whatever reason, the loss of companion shelter cannot be mitigated by pruning) • Trees that are dead or are showing signs of significant, immediate, and irreversible overall decline • Trees infected with pathogens of significance to the health and/or safety of other trees nearby, or very low quality trees suppressing adjacent trees of better quality *NOTE Category U trees can have existing or potential conservation value which it might be desirable to preserve; see 4.5.7.*			See Table 2
	1 Mainly arboricultural qualities	**2 Mainly landscape qualities**	**3 Mainly cultural values, including conservation**	
Trees to be considered for retention				
Category A **Trees of high quality** with an estimated remaining life expectancy of at least 40 years	Trees that are particularly good examples of their species, especially if rare or unusual; or those that are essential components of groups or formal or semi-formal arboricultural features (e.g. the dominant and/or principal trees within an avenue)	Trees, groups or woodlands of particular visual importance as arboricultural and/or landscape features	Trees, groups or woodlands of significant conservation, historical, commemorative or other value (e.g. veteran trees or wood-pasture)	See Table 2
Category B **Trees of moderate quality** with an estimated remaining life expectancy of at least 20 years	Trees that might be included in category A, but are downgraded because of impaired condition (e.g. presence of significant though remediable defects, including unsympathetic past management and storm damage), such that they are unlikely to be suitable for retention for beyond 40 years; or trees lacking the special quality necessary to merit the category A designation	Trees present in numbers, usually growing as groups or woodlands, such that they attract a higher collective rating than they might as individuals; or trees occurring as collectives but situated so as to make little visual contribution to the wider locality	Trees with material conservation or other cultural value	See Table 2
Category C **Trees of low quality** with an estimated remaining life expectancy of at least 10 years, or young trees with a stem diameter below 150 mm	Unremarkable trees of very limited merit or such impaired condition that they do not qualify in higher categories	Trees present in groups or woodlands, but without this conferring on them significantly greater collective landscape value; and/or trees offering low or only temporary/transient landscape benefits	Trees with no material conservation or other cultural value	See Table 2

Table 2 **Identification of tree categories**

Category (from Table 1)	Colour [A)]	RGB code [A)]
U	Dark red	127-000-000
A	Light green	000-255-000
B	Mid blue	000-000-255
C	Grey	091-091-091

[A)] Colours verified against http://safecolours.rigdenage.com/palettefiles.html#files [viewed 2012-03-26].

Appendix 2 – RPA Protective Fence Detail

BS5837 recommended protective fence.

Fence A Heras type fence

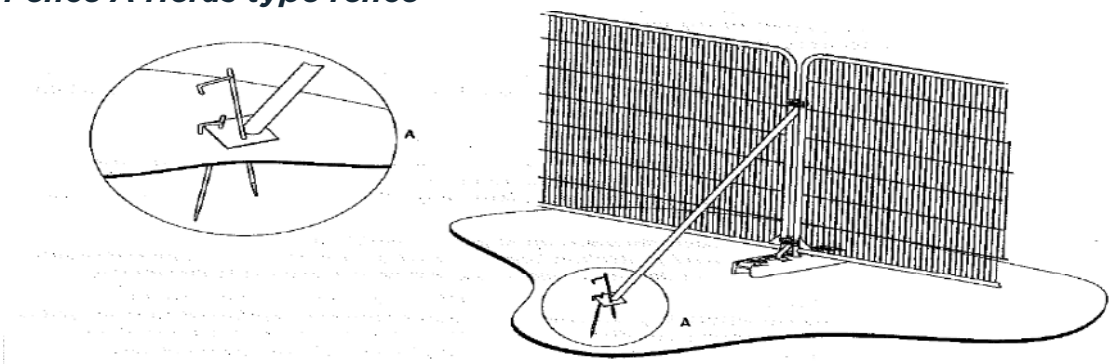

a) Stabilizer strut with base plate secured with ground pins

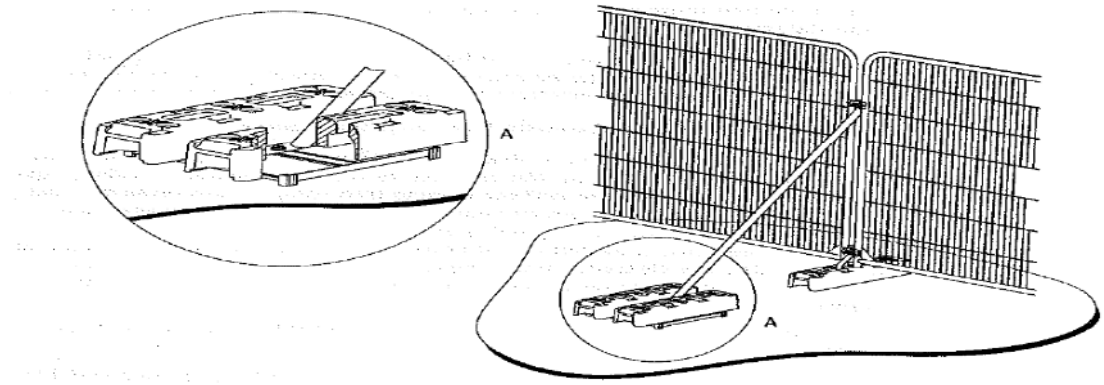

b) Stabilizer strut mounted on block tray

Fence B Scaffolding with wire mesh protective fence

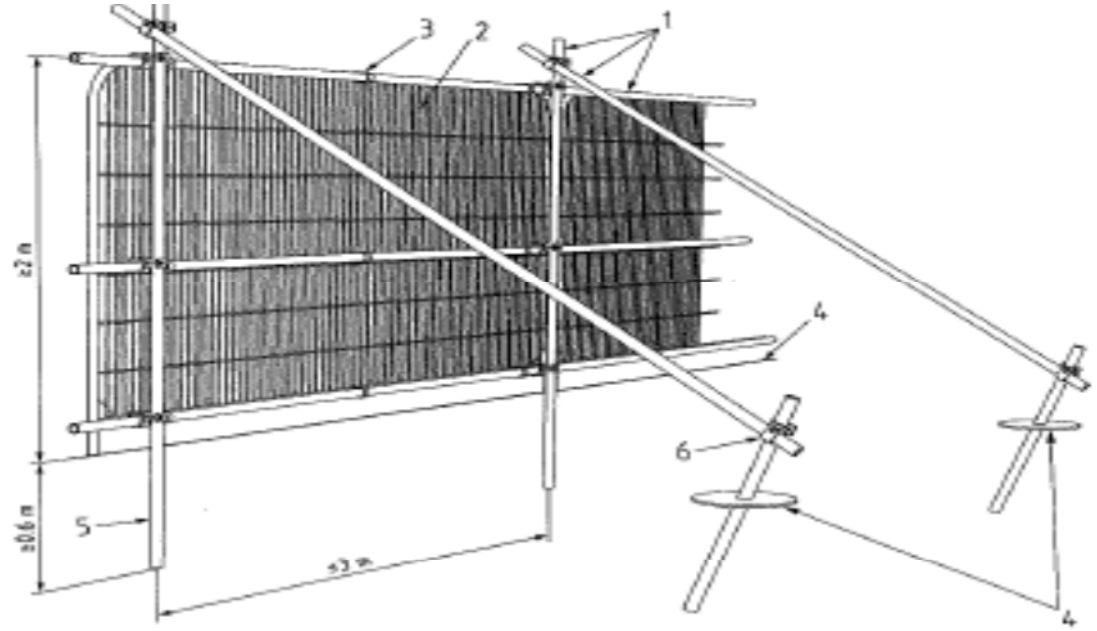

Key

1 Standard scaffold poles
2 Heavy gauge 2 m tall galvanized tube and welded mesh infill panels
3 Panels secured to uprights and cross-members with wire ties
4 Ground level
5 Uprights driven into the ground until secure (minimum depth 0.6 m)
6 Standard scaffold clamps

Appendix 3 – Extract from NJUG Guidelines for the Planning, Installation and Maintenance of Utility Apparatus in Proximity to Trees



Telecommunications Code (Schedule 2). Paragraph 19 of the Telecommunications Code enables operators to require the lopping of trees which overhang the street and obstruct or interfere with the working of their lines.

4. HOW TO AVOID DAMAGE TO TREES

This section gives general guidance on methods of work to minimise damage to trees. The local authority (or for privately owned trees, the owner or their agent), should be consulted at an early stage prior to the commencement of any works. This will reduce the potential for future conflict between trees and apparatus.

4.1 Below Ground

Wherever trees are present, precautions should be taken to minimise damage to their root systems. As the shape of the root system is unpredictable, there should be control and supervision of any works, particularly if this involves excavating through the surface 600mm, where the majority of roots develop.

4.1.1 **Fine Roots**

Fine roots are vulnerable to desiccation once they are exposed to the air. Larger roots have a bark layer which provides some protection against desiccation and temperature change. The greatest risk to these roots occurs when there are rapid fluctuations in air temperature around them e.g. frost and extremes of heat. It is therefore important to protect exposed roots where a trench is to be left open overnight where there is a risk of frost. In winter, before leaving the site at the end of the day, the exposed roots should be wrapped with dry sacking. This sacking must be removed before the trench is backfilled.

4.1.2 **Precautions**

The precautions referred to in this section are applicable to any excavations or other works occurring within the Prohibited or Precautionary Zones as illustrated in Figure 1 – 'Tree Protection Zone'.

4.1.3 **Realignment**

Whenever possible apparatus should always be diverted or re-aligned outside the Prohibited or Precautionary Zones. Under no circumstances can machinery be used to excavate open trenches within the Prohibited Zone.

© NJUG Ltd and its licensors – August 2007

The appropriate method of working within the Precautionary Zone should be determined in consultation with the local authority (or for privately owned trees the owner or their agent) and may depend on the following circumstances;

- the scope of the works (e.g. one-off repair or part of an extensive operation)
- degree of urgency (e.g. for restoration of supplies)
- knowledge of location of other apparatus
- soil conditions
- age, condition, quality and life expectancy of the tree

Where works are required for the laying or maintenance of any apparatus within the Prohibited or Precautionary Zones there are various techniques available to minimise damage.

Acceptable techniques in order of preference are;

a) Trenchless
Wherever possible trenchless techniques should be used. The launch and reception pits should be located outside the Prohibited or Precautionary Zones.
In order to avoid damage to roots by percussive boring techniques it is recommended that the depth of run should be below 600mm. Techniques involving external lubrication of the equipment with materials other than water (e.g. oil, bentonite, etc.) must not be used when working within the Prohibited Zone. Lubricating materials other than water may be used within the Precautionary Zone following consultation and by agreement.

b) Broken Trench - Hand-dug
This technique combines hand dug trench sections with trenchless techniques if excavation is unavoidable. Excavation should be limited to where there is clear access around and below the roots. The trench is excavated by hand with precautions taken as for continuous trenching as in (c) below. Open sections of the trench should only be long enough to allow access for linking to the next section. The length of sections will be determined by local conditions, especially soil texture and cohesiveness, as well as the practical needs for access. In all cases the open sections should be kept as short as possible and outside of the Prohibited Zone.

© NJUG Ltd and its licensors – August 2007

c) Continuous Trench - Hand-dug

The use of this method must be considered only as a last resort if works are to be undertaken by agreement within the Prohibited Zone. The objective being to retain as many undamaged roots as possible.

Hand digging within the Prohibited or Precautionary zones must be undertaken with great care requiring closer supervision than normal operations.

After careful removal of the hard surface material digging must proceed with hand tools. Clumps of roots less than 25mm in diameter (including fibrous roots) should be retained in situ without damage. Throughout the excavation works great care should be taken to protect the bark around the roots.

All roots greater than 25mm diameter should be preserved and worked around. These roots must not be severed without first consulting the owner of the tree or the local authority tree officer / arboriculturist. If after consultation severance is unavoidable, roots must be cut back using a sharp tool to leave the smallest wound.

4.1.5 **Backfilling**

- Any reinstatement of street works in the United Kingdom must comply with the relevant national legislation (see: **Volume 6 – 'Legislation and Bibliography'**). In England this relates to the requirements of the code of practice – 'Specification for the Reinstatement of Openings in Highways' approved under the New Roads and Street Works Act 1991. Without prejudice to the requirements relating to the specification of materials and the standards of workmanship, backfilling should be carefully carried out to avoid direct damage to roots and excessive compaction of the soil around them.

- The backfill should, where possible, include the placement of an inert granular material mixed with top soil or sharp sand (not builder's sand) around the roots. This should allow the soil to be compacted for resurfacing without damage to the roots securing a local aerated zone enabling the root to survive in the longer term.

- Backfilling outside the constructed highway limits should be carried out using the excavated soil. This should not be compacted but lightly "tamped" and usually left slightly proud of the surrounding surface to allow natural settlement. Other materials should not be incorporated into the backfill.

© NJUG Ltd and its licensors – August 2007

4.1.6 **Additional Precautions near Trees**

- Movement of heavy mechanical plant (excavators etc.) must not be undertaken within the Prohibited Zone and should be avoided within the Precautionary Zone, except on existing hard surfaces, in order to prevent unnecessary compaction of the soil. This is particularly important on soils with a high proportion of clay. Spoil or material must not be stored within the Prohibited Zone and should be avoided within the Precautionary Zone.

- Where it is absolutely necessary to use mechanical plant within the Precautionary Zone care should be taken to avoid impact damage to the trunk and branches. A tree must not be used as an end-stop for paving slabs or other materials nor for security chaining of mechanical plant. If the trunk or branches of a tree are damaged in any way advice should be sought from the local authority tree officer / arboriculturist.

See TABLE 1 –'Prevention of Damage to Trees Below Ground' below for summary details regarding causes and types of damage to trees and the implications of the damage and the necessary precautions to be taken to avoid damage.

© NJUG Ltd and its licensors – August 2007

Appendix 4 - BS5837 Recommendations for the use of Scaffolding within the Root Protection Areas (RPA's) of trees-(temporary ground protection)

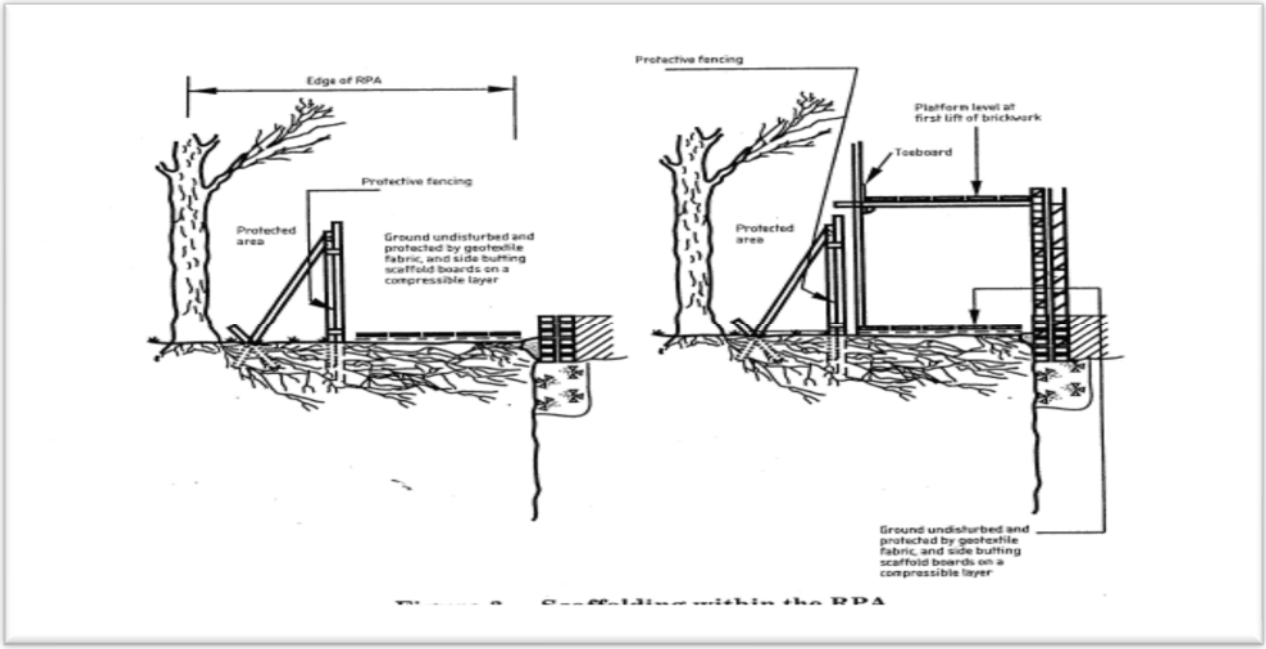

The use of scaffolding within the RPA

Appendix 5 – Glossary of Terms

Arboricultural Implications Assessment (AIA) A study, undertaken by an arboriculturist, to identify, evaluate and possibly mitigate the extent of direct and indirect impacts on existing trees that may arise as a result of the implementation of any site layout proposal.

Arboricultural Method Statement (AMS) The methodology for the implementation of any aspect of development that has the potential to result in loss of or damage to a tree.

Construction Exclusion Zone Area based on the RPA (in m^2), identified by an arboriculturist, to be protected during development, including demolition and construction work, by the use of barriers and/or ground protection fit for purpose to ensure the successful long-term retention of a tree.

Crown or Apron clearance Height or spread in meters of the lowest significant branches above ground level.

Diameter Trunk diameter measured at 1.5 metres above ground level or at the base of trees where they are twin or multi stemmed.

DBH Diameter at breast height.

Height The height of a tree measure using a clinometer.

Management recommendations General comments on the condition of the tree, group or woodland and recommendations for future work

Pruning The removal of living or dead parts of a plant or tree. Such parts may be soft growth, branches, limbs or sections of the trunk or stem.

Root Protection Area (RPA) Layout design tool indicating the area surrounding a tree that contains sufficient rooting volume to ensure the survival of the tree, shown in plan form in m^2

Species The species is based on visual field observation and lists the common name. On in depth surveys the botanical name is also listed.

Spread Measurement of the largest extent of the trees branch growth.

Structural condition Description of any decayed or physical defects.

Tree Constraints Plan (TCP) Plan prepared by an arboriculturist for the purposes of layout design showing the RPA and representing the effect that the mature height and spread of retained trees will have on layouts through shade, dominance, etc.

Tree Protection Plan (TPP) Scale drawing prepared by an arboriculturist showing the finalised layout proposals, tree retention and tree and landscape protection measures detailed within the Arboricultural method statement (AMS), which can be shown graphically.

Tree Root Preservation Service (TRPS) A non-evasive foundation construction system designed to prevent damage to tree roots and adapted for specific site use in conjunction with an arboriculturist.

Tree reference number	Species	Height (m)	Dbh	No of stems	Canopy Spread N (m)	Canopy Spread E (m)	Canopy Spread S (m)	Canopy Spread W (m)	Height of crown clearance (m)	Age class	Physiological condition	Structural condition	Preliminary management recommendations	Estimated remaining contribution	Category grading
T1	English oak	22	1500	1	0.2	8	7		6.5	OM	Fair	Good	Veteren In slow decline	10+	A1
W1	English oak	25	1000	1+	7.5	7.5	7.5	7.5	4	M/OM	Good	Good	None	20+	B2

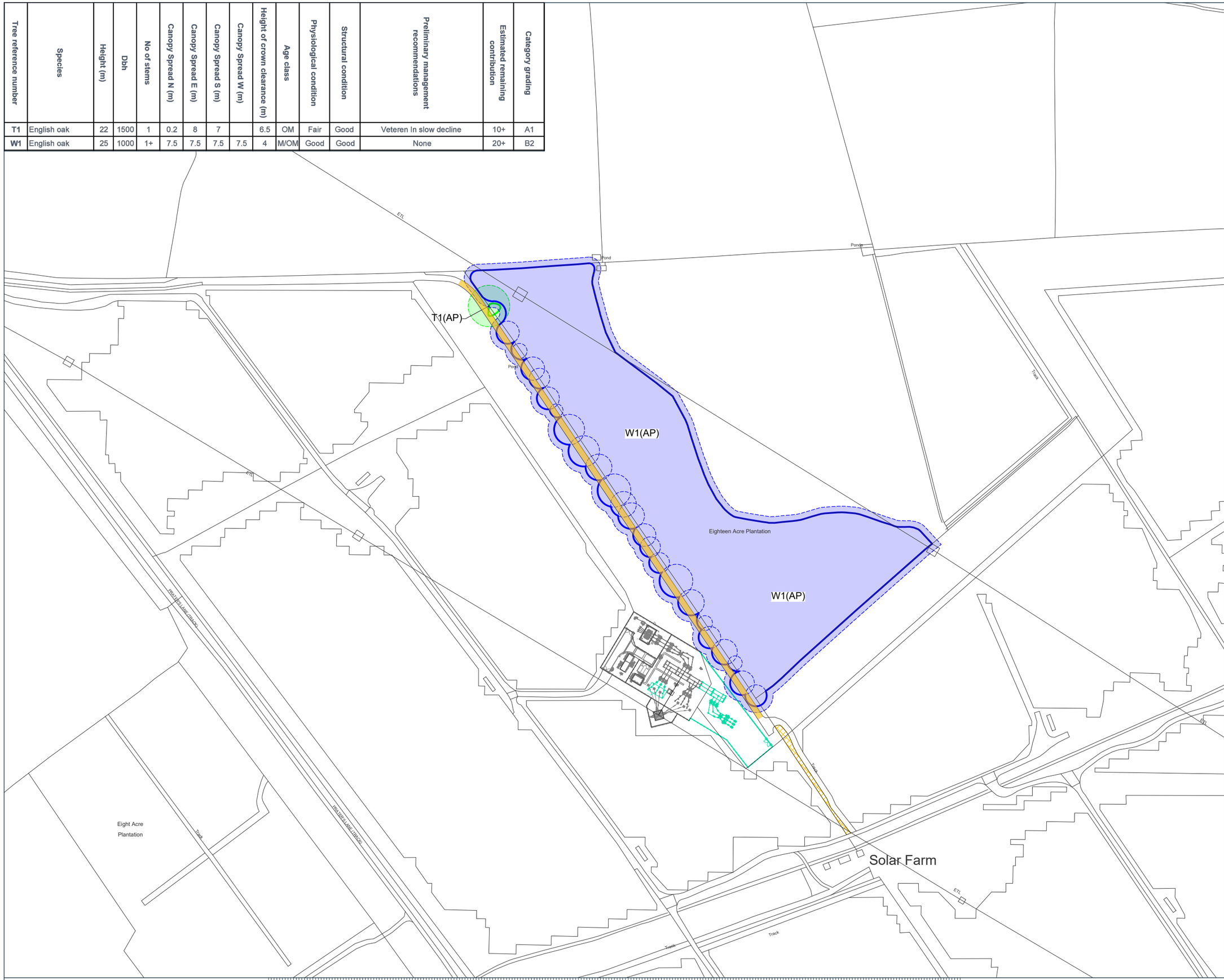

Site Plan

0m 20m 40m 60m 80m 100m 120m 140m 160m 180m 200m 220m 240m 260m 280m 300m 320m 340m 360m 380m 400m 420m 440m 460m 480m 500m

Scale 1:2500

DALCOUR MACLAREN

Key:

- Canopy Spread - Category A Tree
- Minimum RPA - Category A Tree
- Canopy Spread - Category B Tree
- Minimum RPA - Category B Tree
- Hedge

Notes:

Site Plan provided by SSE

Project Number: ERG940
Sandridge132/33kV Substation
Overview Plan
Drawing Number: SKT0/21/0398

Interest: N/A

Location: Sandridge Hill, Melksham, Wiltshire, SN12 7QT

Coords: 393521, 164136

Scheme Name: EP - Snarlton Lane

Drawing Name: Tree Constraints Plan

Drawing No: 23007928_PLN_TCP_5.1

Rev	Date	Description
-	25.09.2023	First Issue

Drawn:	SG
Approved:	CBD
Sheet No:	1 of 1
Sheet Size:	A3

Scottish & Southern Electricity Networks

Plan produced on behalf of Southern Electric Power Distribution PLC.

BASED UPON THE ORDNANCE SURVEY MAP WITH THE SANCTION OF THE CONTROLLER OF HM STATIONERY OFFICE.

CROWN COPYRIGHT RESERVED. © OS LICENCE No. 100019808.

Tree reference number	Species	Height (m)	Dbh	No of stems	Canopy Spread N (m)	Canopy Spread E (m)	Canopy Spread S (m)	Canopy Spread W (m)	Height of crown clearance (m)	Age class	Physiological condition	Structural condition	Preliminary management recommendations	Estimated remaining contribution	Category grading
T1	English oak	22	1500	1	0.2	8	7		6.5	OM	Fair	Good	Veteren In slow decline	10+	A1
W1	English oak	25	1000	1+	7.5	7.5	7.5	7.5	4	M/OM	Good	Good	None	20+	B2

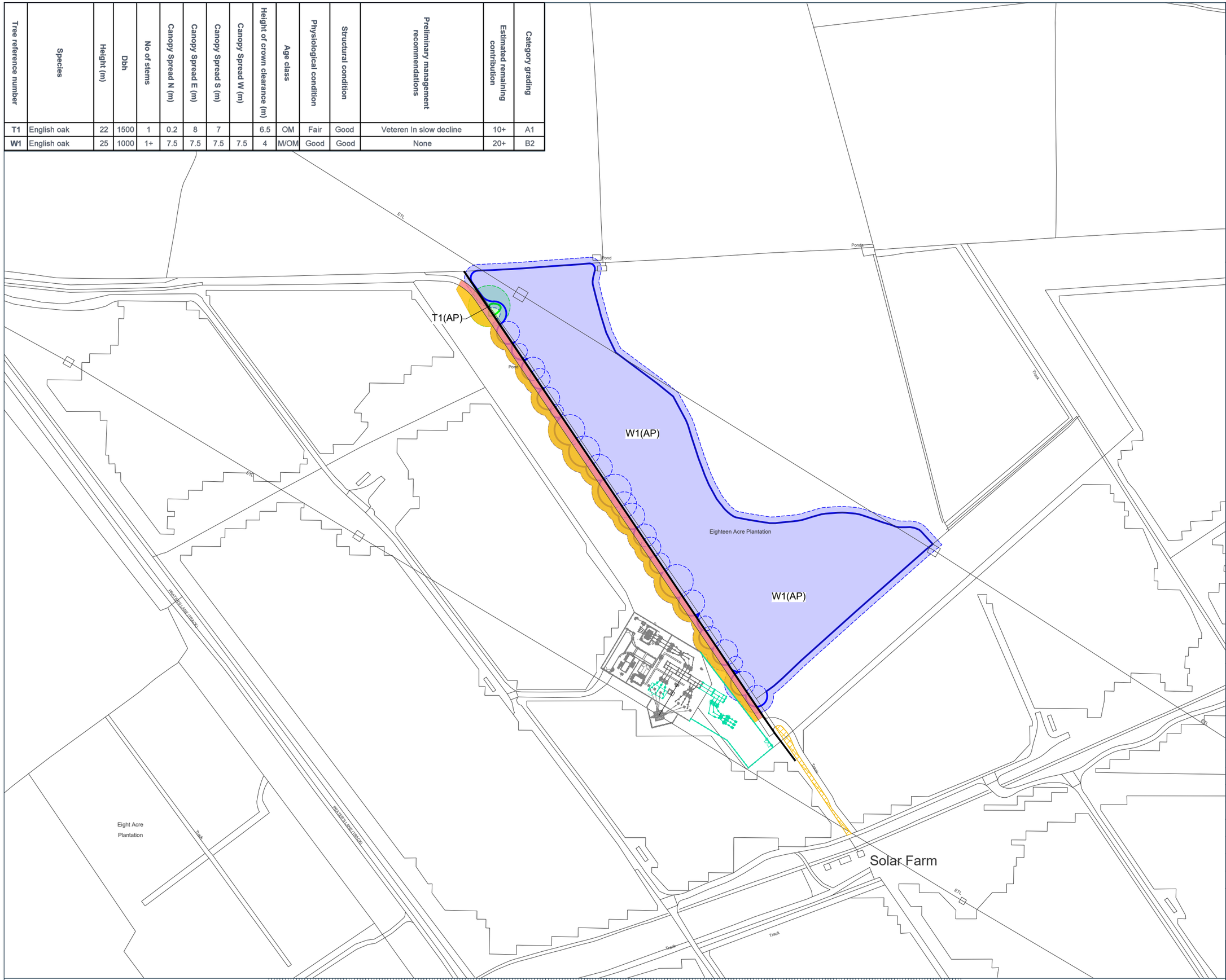

Site Plan

Scale 1:2500

DALCOUR MACLAREN

Key:

- Canopy Spread - Category A Tree
- Minimum RPA - Category A Tree
- Canopy Spread - Category B Tree
- Minimum RPA - Category B Tree
- Hedge
- Permanent Ground Protection
- Temporary Ground Protection During Development Phases
- Temporary Protective Fencing

Notes:

Site Plan provided by SSE

Project Number: ERG940
Sandridge132/33kV Substation
Overview Plan
Drawing Number: SKT0/21/0398

Interest: N/A

Location: Sandridge Hill, Melksham, Wiltshire, SN12 7QT

Coords: 393521, 164136

Scheme Name: EP - Snarlton Lane

Drawing Name: Tree Protection Plan

Drawing No: 23007928_PLN_TPP_6.1_A

Rev	Date	Description
-	25.09.2023	First Issue
A	26.09.2023	Matting and Fencing

Drawn:	SG
Approved:	CBD
Sheet No:	1 of 1
Sheet Size:	A3

Scottish & Southern Electricity Networks

Plan produced on behalf of Southern Electric Power Distribution PLC.

BASED UPON THE ORDNANCE SURVEY MAP WITH THE SANCTION OF THE CONTROLLER OF HM STATIONERY OFFICE.

CROWN COPYRIGHT RESERVED. © OS LICENCE No. 100019808.

DALCOUR MACLAREN



Midlands
4 Bredon Court
Brockeridge Park
Twyning
Gloucestershire GL20 6FF

T: 01684 217 703
E: info@dalcourmaclaren.com
E: EPTeam@dalcourmaclaren.com

dalcourmaclaren.com