aH72 SK



DATA SHEET

abora aH72SK

aH TECH

The Solar Keymark
CEN Keymark Scheme

DIN Geprüft

DVE

CE

abora
Advanced Solar Technology

aH72 SK

Hybrid solar panel with simultaneous thermal and photovoltaic production.



* All percentages of production are conditioned to the working temperature range of installation.

Dimensions

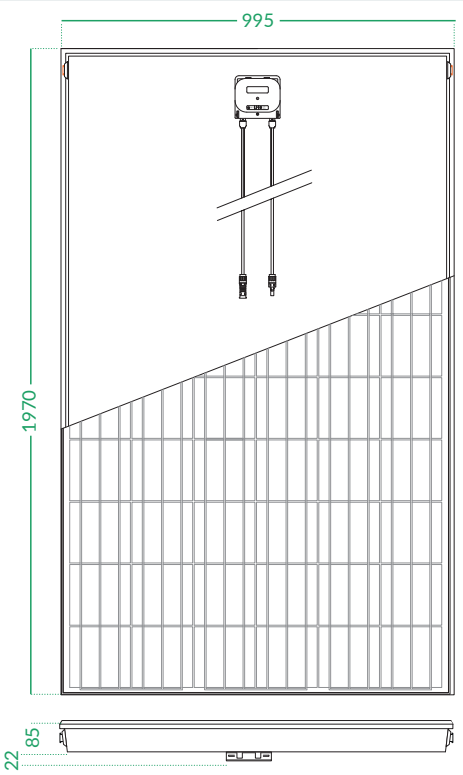

Loss of charge

Pressure drop: *T^a max:* 20,13 °C / *T^a min:* 19,39 °C

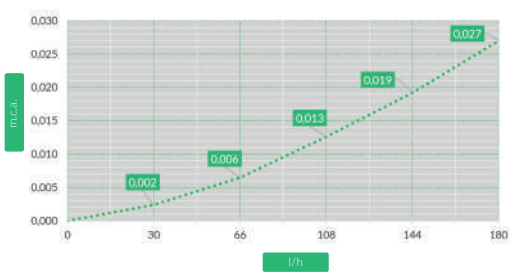

General specifications

Length x width x thickness	1.970 x 995 x (85+22) mm
Total area	1,96m²
Opening area	1,88 m²
Number of cells	72
Weight	50 kg.
Front glass	3,2 mm. tempered
Framework	Aluminum
Connection box protection	IP65
Number of diodes	3 diodes
Dimensions of the cell	156 x 156
Connection type PV / length cables	Solarlok PV4 / 1m

Electric specifications

Standard test conditions STC: AM 1.5. irradiation 1000 W / m²
Cell temperature 25 °C

Cell type	Mono-crystalline
Rated power (W)	350 W
Maximum power voltage (Vmpp)	39,86 V
Maximum power current (Impp)	8,86 A
Open circuit voltage (Voc)	48,61 V
Short circuit current (Isc)	9,16 A
Module efficiency (%)	17,8
Power tolerance (W)	+/-4%
Maximum system voltage	DC 1000 V (IEC)
Backsheet	Black
Temperature coefficient of Pmpp	-0,36%/°C
Temperature coefficient of Voc	-0,28%/°C
Temperature coefficient of Isc	+0,06%/°C
Maximum reverse current	15A
NOCT Temperature*	45+/-2 °C

Thermal specifications

Optical performance	0,7
Coefficient of thermal losses, a1	5,98 W/m².K
Coefficient of thermal losses, a2	0,00 W/m².K²
Internal liquid capacitance	1,78 L
Stagnation temperature	126ºC
Number of hydraulic connections	4 connections
Measure Hydraulic connection	Quick connect
Maximum permissible pressure	10 bar
Nominal flow	60 L/h

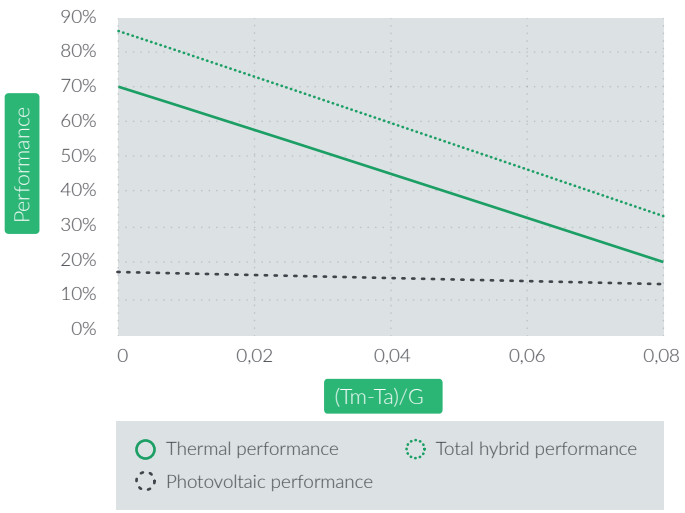

The Solar Keymark
CEN Keymark Scheme

Conforming with Product Standards:
IEC 61215 Ed2 por UNE-EN IEC 61215:2022
IEC 61730-1,-2:2004 por IEC 61730-1,-2:2019
EN 12975-1:2006+A1:2001 por EN 12975-1:2006+A1:2011
ISO 9806:2071 por ISO 9806:2020

Subject to technical modifications without notice.
Guarantee of 10 years.

MORE INFO AT
www.abora-solar.com

21/04/2022
Version 5