LITTLE GREENE
Etruria 326

- Background Colour

LITTLE GREENE
Wood Ash 229

- Text Colour

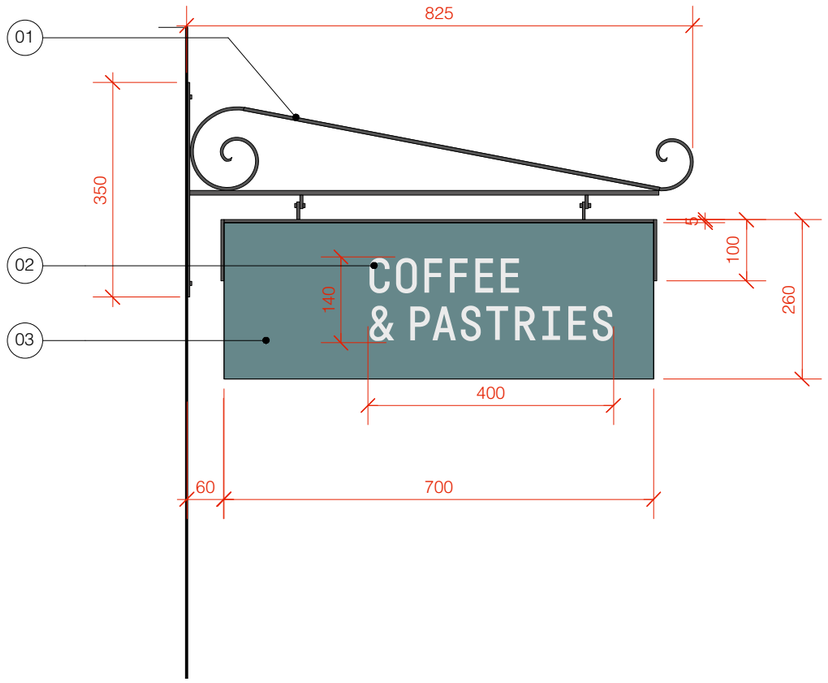

01 SIDE ELEVATION
Scale: 1:10

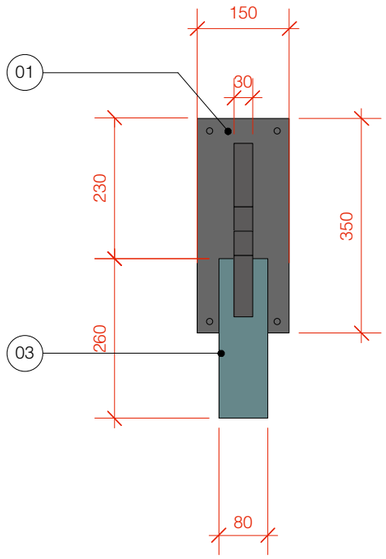

02 FRONT ELEVATION
Scale: 1:10

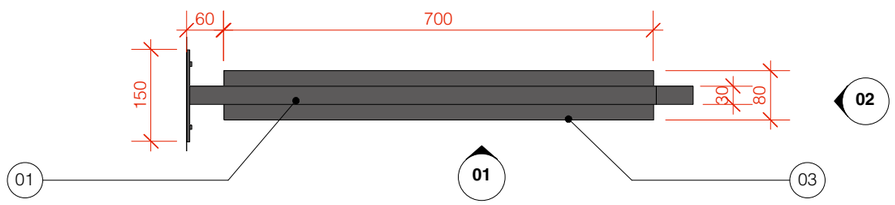

03 PLAN VIEW
Scale: 1:10

200 400 600 800 1000 mm

Notes

01. 5mm thick mild steel traditional bracket with hand formed steel scroll and a welded construction. Sprayed to match Little Greene Lamp Black 228 in Satin finish.
02. Paint stencilled letters to match brand colour paint ref: Little Greene - Wood Ash No. 229, Intelligent Exterior Eggshell finish.
03. Double sided Accoya framed sign with 12mm Tricoya panel.
Frame and panel to be painted in colour to match shopfront paint ref: Little Greene - Etruria No. 326 in Intelligent Exterior Eggshell finish.

Revision

DESCRIPTION
Projecting Sign

CLIENT
Cornish Bakery

PROJECT
Salisbury

ADDRESS
36-38 High Street, Salisbury, SP1 2NT

JOB No. 2904 DWG No. 02.4 REV. -

DATE. JUL 23

STATUS. PLANNING

DRAWN BY
MC

SCALE
AS SHOWN @A3

PATH
Unit 5, 7 Wenlock Road, London N1 7SL
T +44 (0)20 7253 9005 F +44 (0)20 72539004
www.pathdesign.co.uk info@pathdesign.co.uk

THIS DRAWING IS FOR DESIGN INTENT PURPOSES ONLY.
• This drawing is issued on condition that it is not copied or disclosed to any other unauthorised person without the prior consent of PATH DESIGN .
• Contractors should provide their own setting out drawings for comment by PATH DESIGN.
• This drawing is the property of PATH DESIGN and copyright is reserved by them.
• All structural works are to be detailed / confirmed and approved by structural engineer .
• All dimensions to be verified on site prior to work commencing .