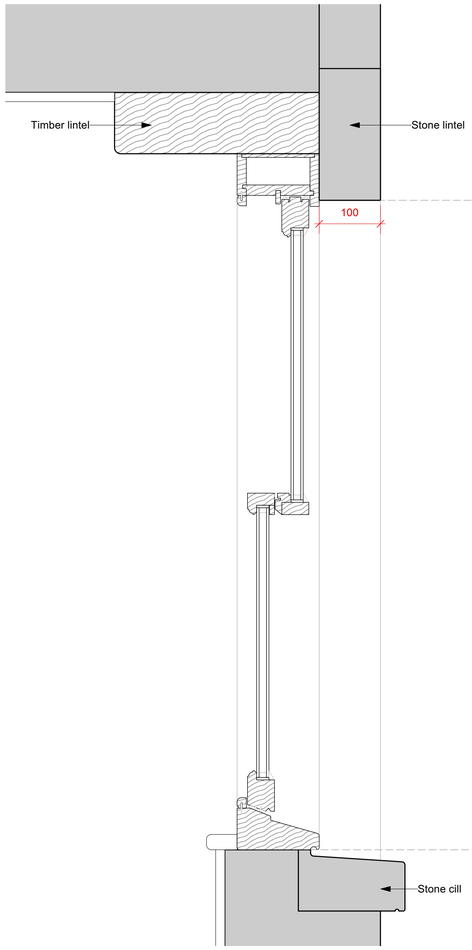

1 Window Section
Scale: 1:5

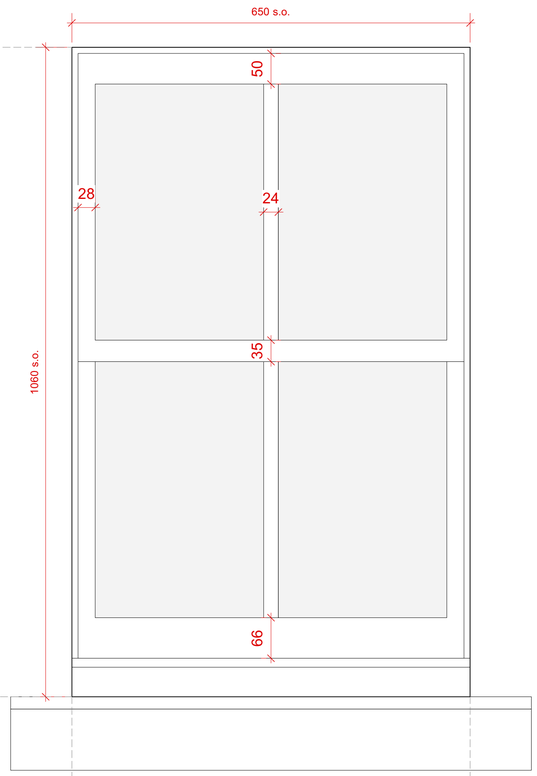

2 Proposed Window Elevation
Scale: 1:5

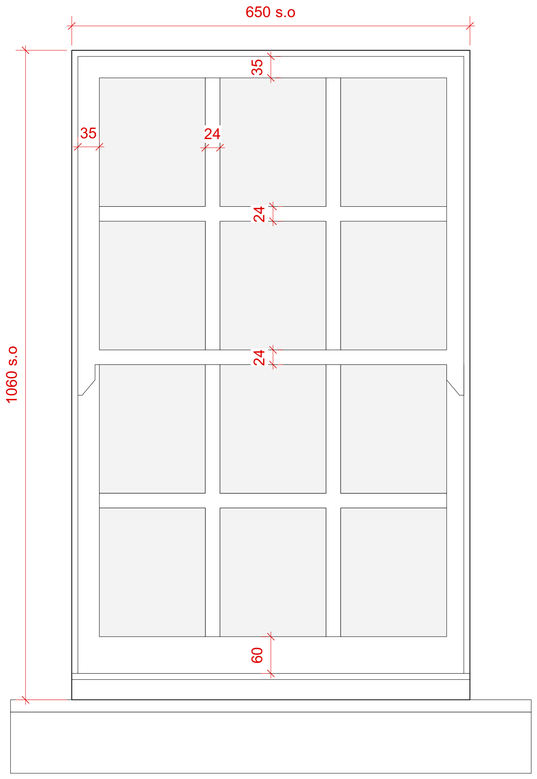

9 Existing Window Elevation
Scale: 1:5

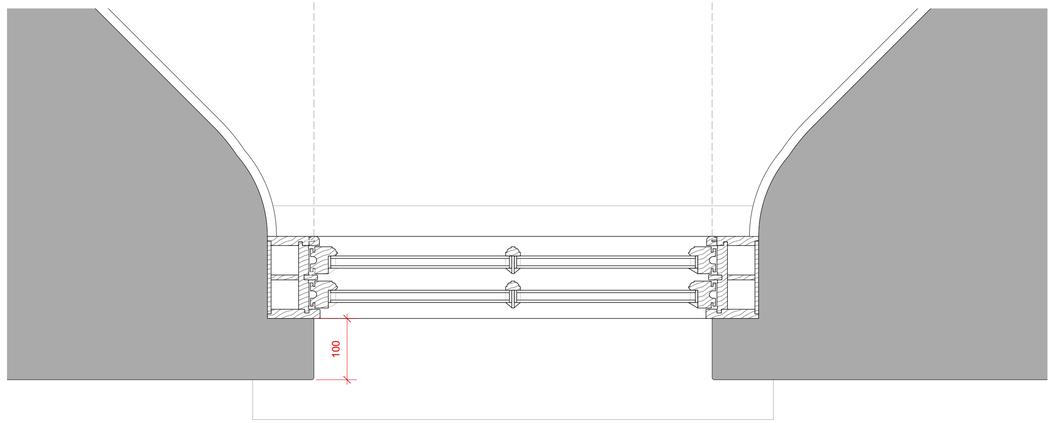

3 Window Plan
Scale: 1:5

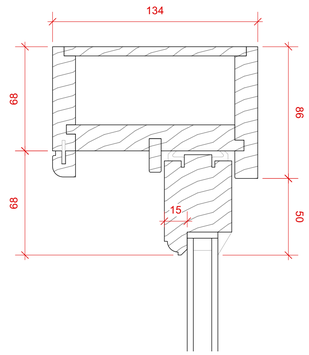

4 Head Detail
Scale: Half Actual Size

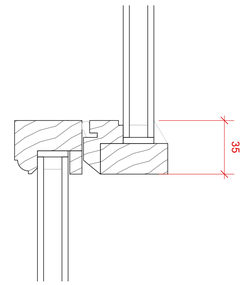

5 Transom Detail
Scale: Half Actual Size

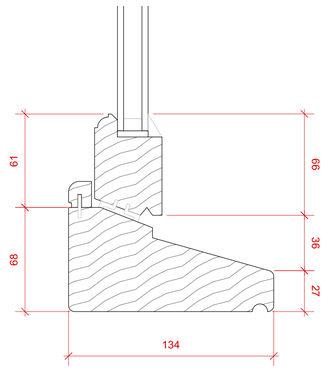

6 Cill Detail
Scale: Half Actual Size

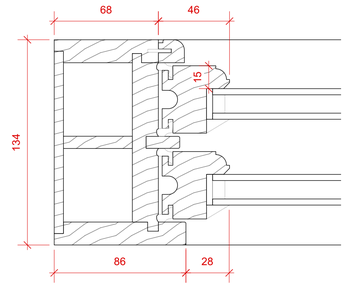

7 Jamb Detail
Scale: Half Actual Size

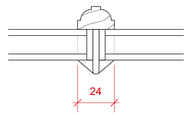

8 Glazing Bar Detail
Scale: Half Actual Size

Project:
Turnpike Cottage

Drawing:
Replacement Sash Window Details

Drawing No: 033-361

Revision: A

Scale: AS NOTED
Date Created: 22/03/2023
Status: Planning

BAYITH
Heathrow, Brimpton Road, Baughurt, RG26 5JJ
www.bayith.co.uk
info@bayith.co.uk

Copyright © 2019. Not to be used for any purposes without consent