AB
15.05.23

REFER TO DRAWING 22013.SCH500 - WINDOW AND DOOR SCHEDULE FOR ELEVATIONS

HEAD

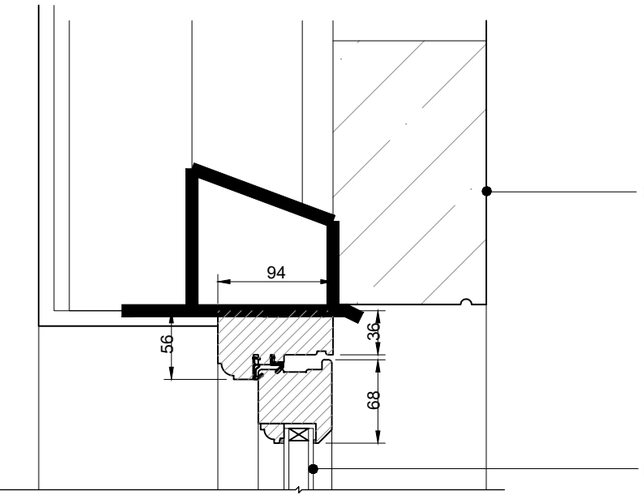

Re-constituted stone lintel to match existing

Factory double glazed 4/16/4 low e argon fill

CILL

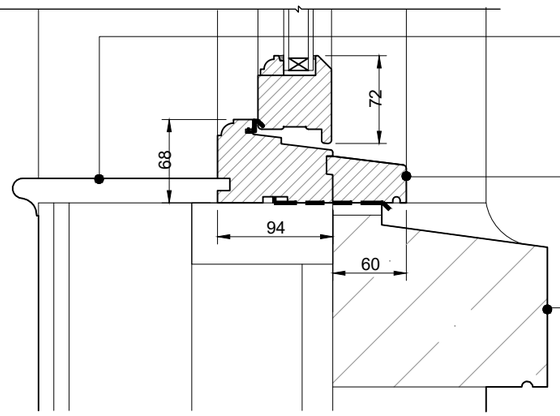

Factory primed MDF ogee profiled window cill to match existing.

European redwood with a hardwood cill to receive 3 coat paint finish to match existing

Re-constituted chamfered stooled stone cill to match existing

JAMB

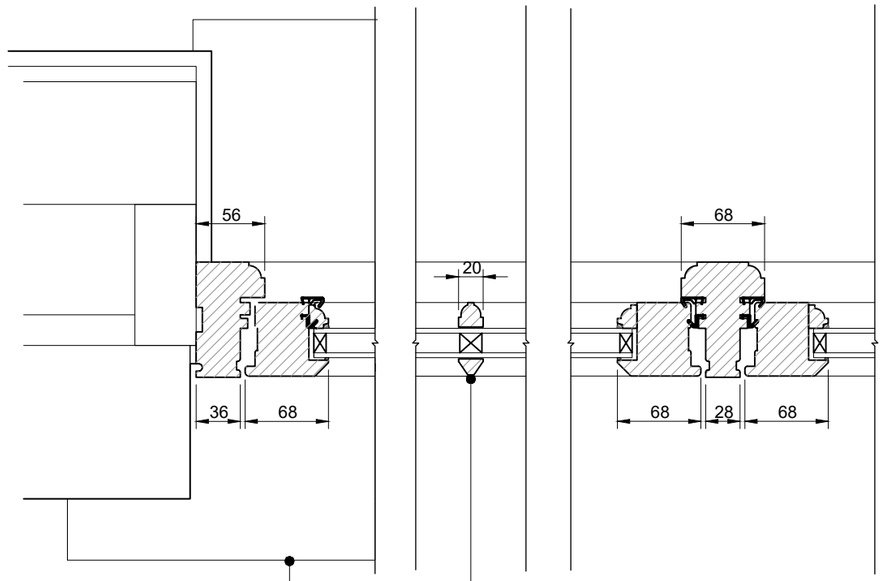

Elegant 20mm wide ovolo glazing bar

PRELIMINARY ISSUE
CASEMENT WINDOW - TYPE 2 1:5 @ A3

MATHEWSON WATERS ARCHITECTS
The Old Surgery
Crowle Road . Lambourn . RG17 8NR
Berkshire
enquiries@mw-architects.co.uk
www.mw-architects.co.uk
01488 73131
Devizes Studio: 01380 721994
Wrington Studio: 07540 726562
RIBA Chartered Practice

© MATHEWSON WATERS ARCHITECTS LLP

22013.SCH504A

PROJECT
Upper Beanacre Farm

REVISION	DATE	AMENDMENTS
A	15.05.23	Building Regulations Issue

0 0.1 0.2 0.25m
SCALE BAR - 1:5

ALL FIGURED DIMENSIONS ARE TO BE TAKEN IN PREFERENCE TO SCALED DIMENSIONS AND ANY INACCURACIES ARE TO BE REPORTED TO THE ARCHITECT. DIMENSIONS TO BE CHECKED ON SITE BEFORE ANY WORK IS PUT IN HAND OR PREFABRICATED. COPYRIGHT OF THIS DRAWING IS RETAINED BY THE ARCHITECT AND IT MUST NOT BE REPRODUCED WITHOUT THEIR WRITTEN CONSENT.