AB
15.05.23

REFER TO DRAWING 22013.SCH500 - WINDOW AND DOOR SCHEDULE FOR ELEVATIONS

HEAD

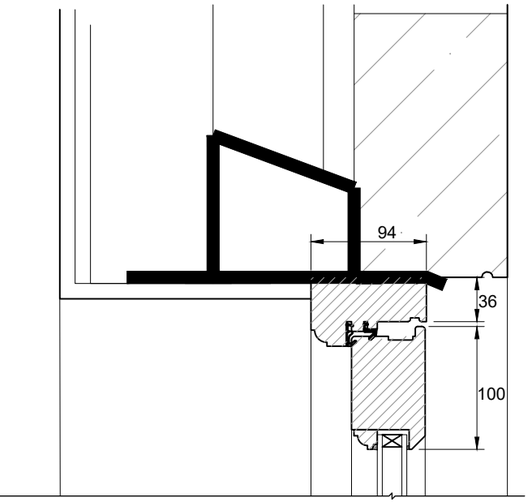

CILL

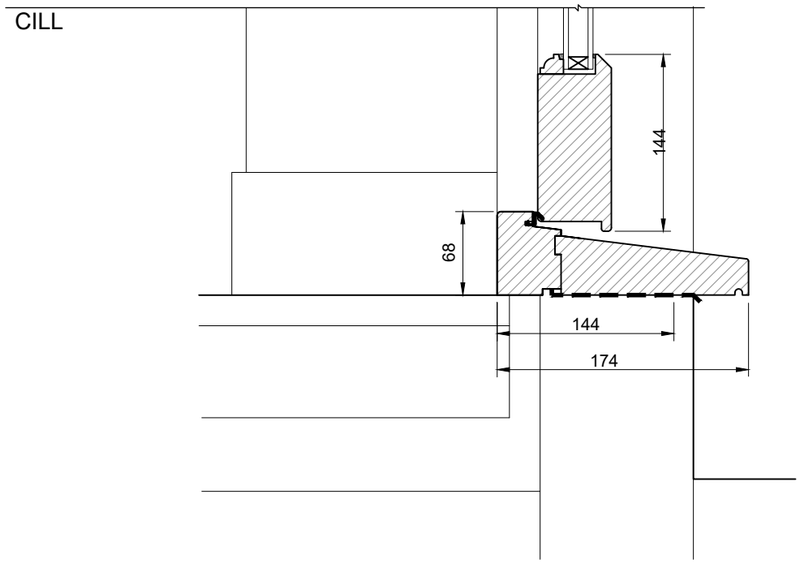

JAMB

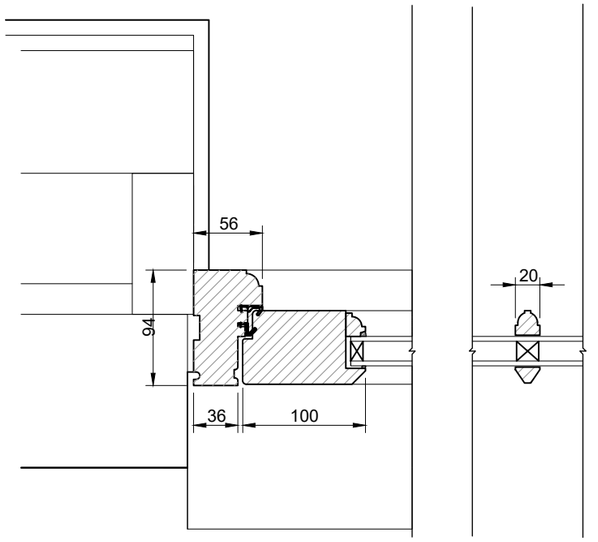

PROJECT

Upper Beanacre Farm

REVISION	DATE	AMENDMENTS
A	15.05.23	Building Regulations Issue

0 0,1 0,2 0,25m

SCALE BAR - 1:5

PRELIMINARY ISSUE

FRENCH DOORS - TYPE 3

1:5 @ A3

MATHEWSON WATERS ARCHITECTS
The Old Surgery
Crowle Road - Lambourn
Berkshire - RG17 8NR
enquiries@mw-architects.co.uk
www.mw-architects.co.uk
01488 73131
Devizes Studio: 01380 721994
Wrington Studio: 07540 765562
RIBA Chartered Practice

© MATHEWSON WATERS ARCHITECTS LLP

22013.SCH502A

ALL FIGURED DIMENSIONS ARE TO BE TAKEN IN PREFERENCE TO SCALED DIMENSIONS AND ANY INACCURACIES ARE TO BE REPORTED TO THE ARCHITECT. DIMENSIONS TO BE CHECKED ON SITE BEFORE ANY WORK IS PUT IN HAND OR PREFABRICATED. COPYRIGHT OF THIS DRAWING IS RETAINED BY THE ARCHITECT AND IT MUST NOT BE REPRODUCED WITHOUT THEIR WRITTEN CONSENT.