AB
15.05.23

REFER TO DRAWING 22013.SCH500 - WINDOW AND DOOR SCHEDULE FOR ELEVATIONS

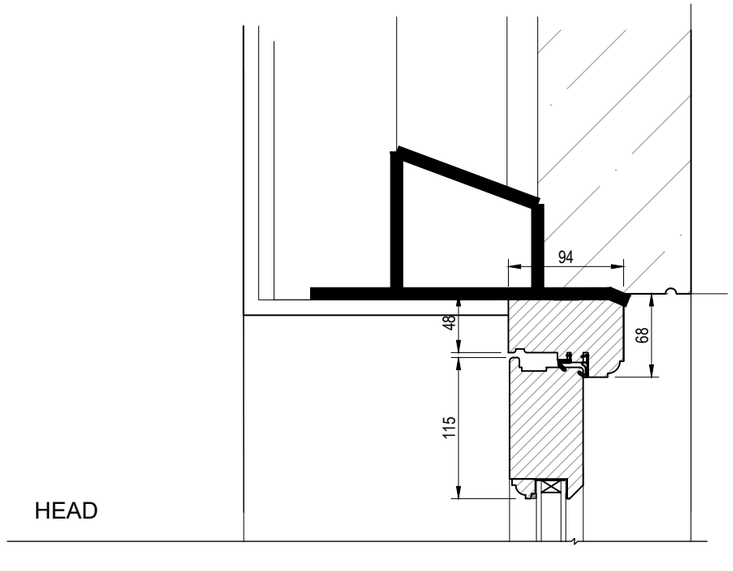


HEAD

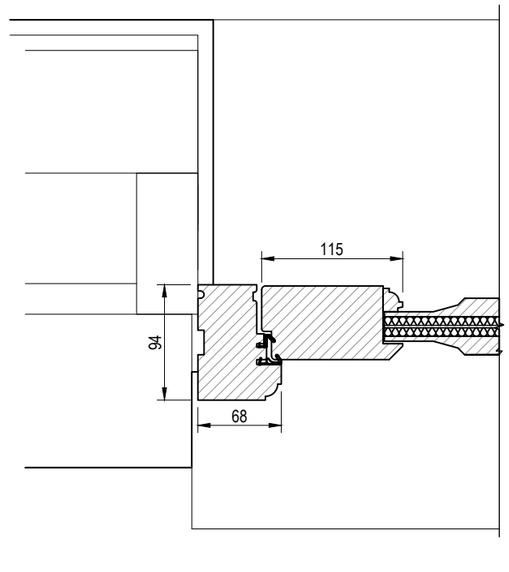


JAMB

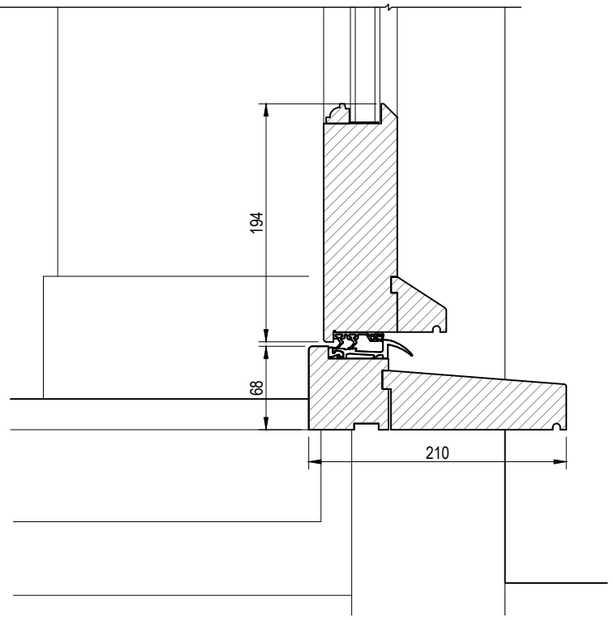


CILL

PROJECT

# Upper Beanacre Farm

| REVISION | DATE | AMENDMENTS |
|---|---|---|
| A | 15.05.23 | Building Regulations Issue |

0 0.1 0.2 0.25m

SCALE BAR - 1:5

PRELIMINARY ISSUE

ENTRANCE DOOR - TYPE 1

1:5 @ A3

MATHEWSON WATERS ARCHITECTS
The Old Surgery
Crowle Road . Lambourn
Berkshire . RG17 8NR
enquiries@mw-architects.co.uk
01488 72131
Wiltshire Studio: 07540 726562
Devizes Studio: 01380 721994
RIBA Chartered Practice

© MATHEWSON WATERS ARCHITECTS LLP

22013.SCH501A

ALL FIGURED DIMENSIONS ARE TO BE TAKEN IN PREFERENCE TO SCALED DIMENSIONS AND ANY INACCURACIES ARE TO BE REPORTED TO THE ARCHITECT. DIMENSIONS TO BE CHECKED ON SITE BEFORE ANY WORK IS PUT IN HAND OR PREFABRICATED. COPYRIGHT OF THIS DRAWING IS RETAINED BY THE ARCHITECT AND IT MUST NOT BE REPRODUCED WITHOUT THEIR WRITTEN CONSENT.