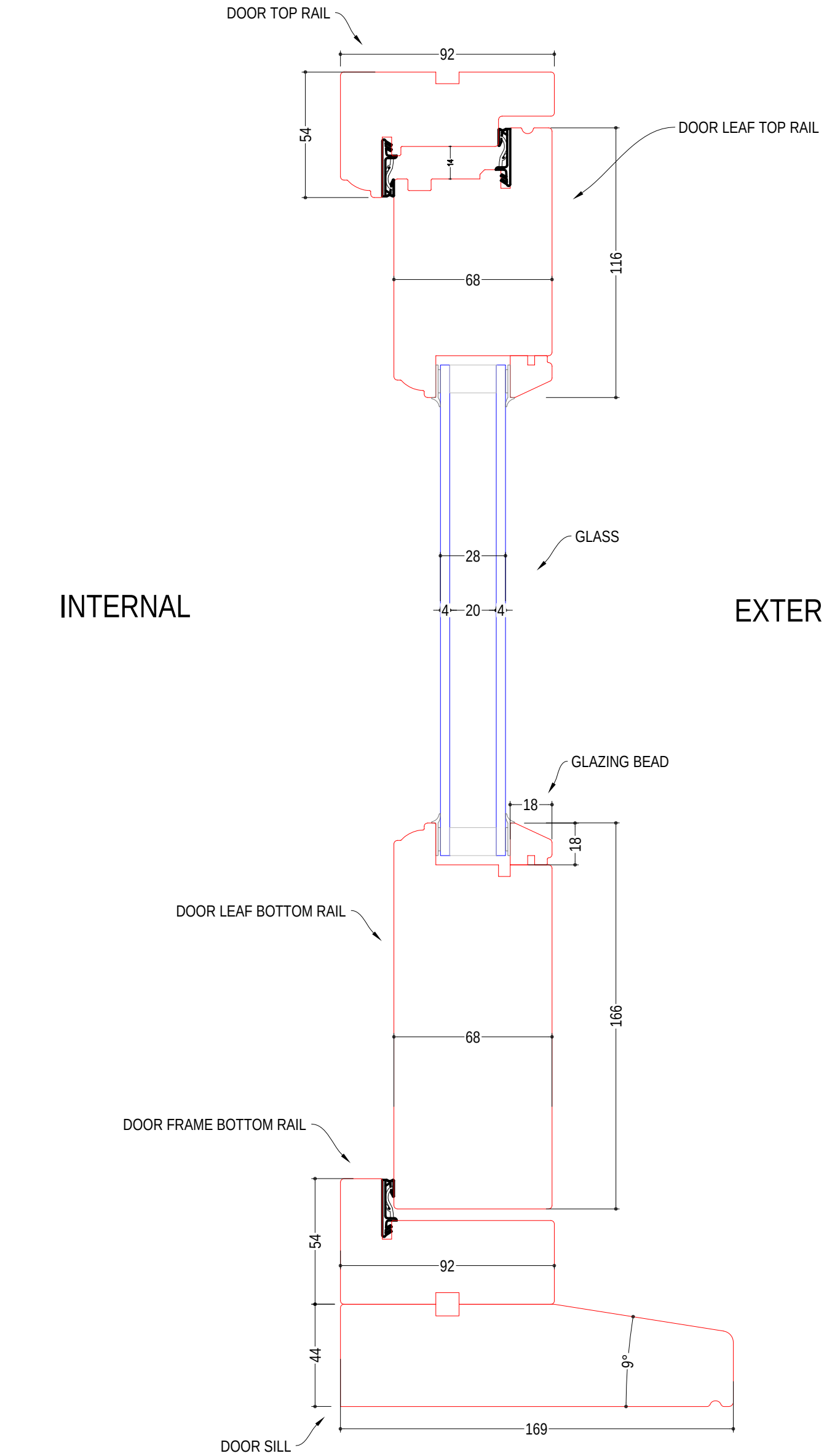

DRAWING:	FLUSH DOOR VERTICAL SECTION			NOTES:	1:
SCALE @ A3:	1:2	PROJECT REF:	SECTION DRAWINGS		2:
VIEW FROM:	-	PROJECT #:	1000		3:
SITE:	Y	DATE:	25.10.2017		4:
REVISION:	A	STATUS:	WORKING DRAWING		5:
DRAWING #:	04	DRAWN BY:	MARSHALL		6:

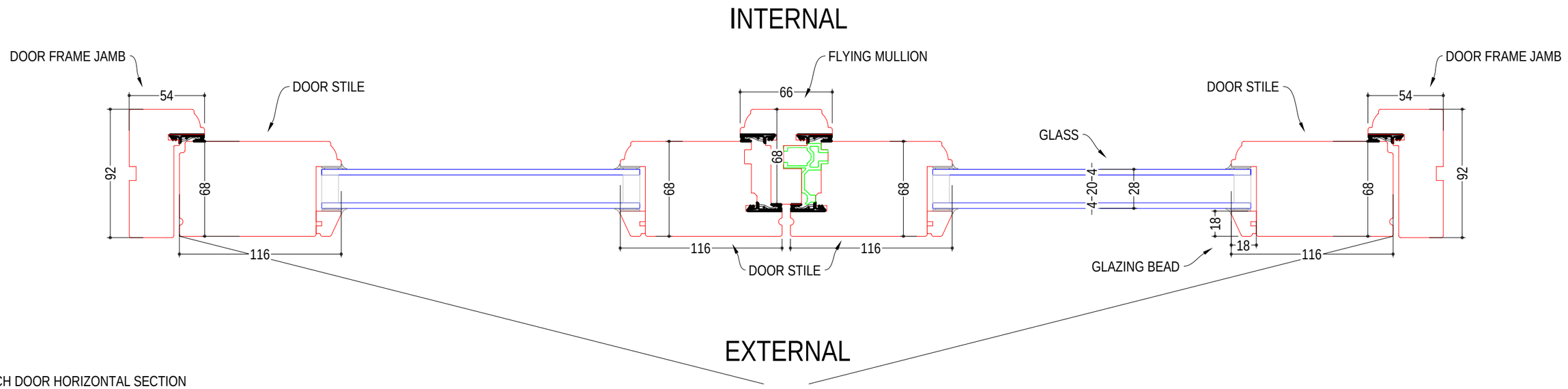

FRENCH DOOR HORIZONTAL SECTION
1:3

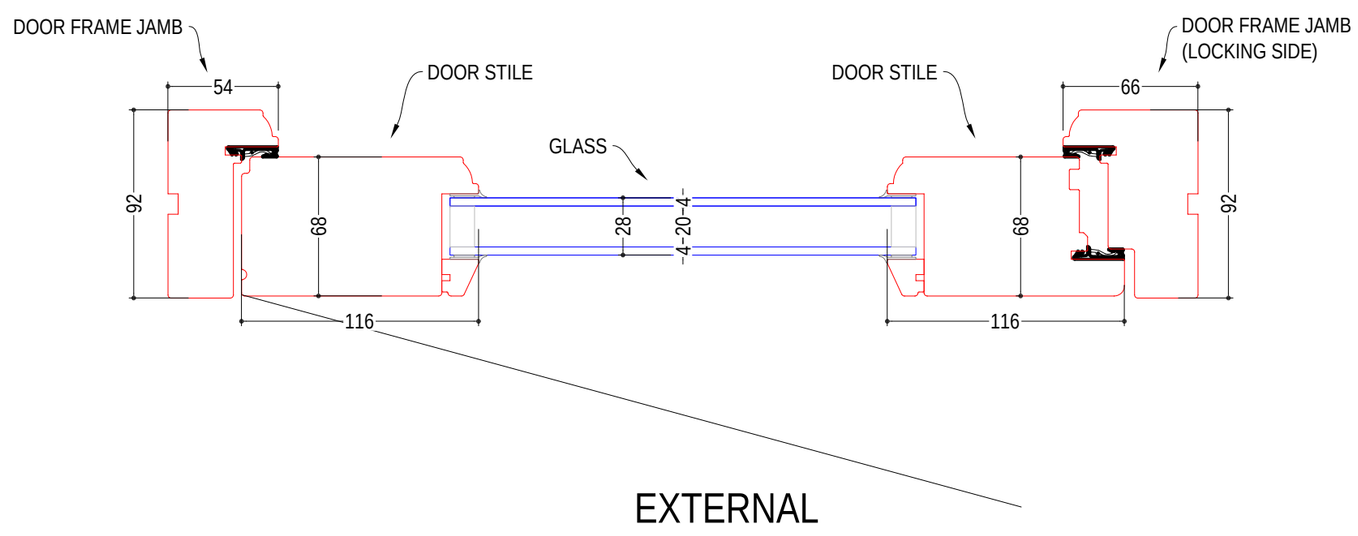

SINGLE DOOR HORIZONTAL SECTION
1:3

DRAWING:	FLUSH FRENCH DOOR AND SINGLE DOOR HORIZONTAL SECTIONS			NOTES:	1:
SCALE @ A3:	-	PROJECT REF:	SECTION DRAWINGS		2:
VIEW FROM:	-	PROJECT #:	1000		3:
SITE:	Y	DATE:	25.10.2017		4:
REVISION:	A	STATUS:	WORKING DRAWING		5:
DRAWING #:	03	DRAWN BY:	MARSHALL		6:

INTERNAL

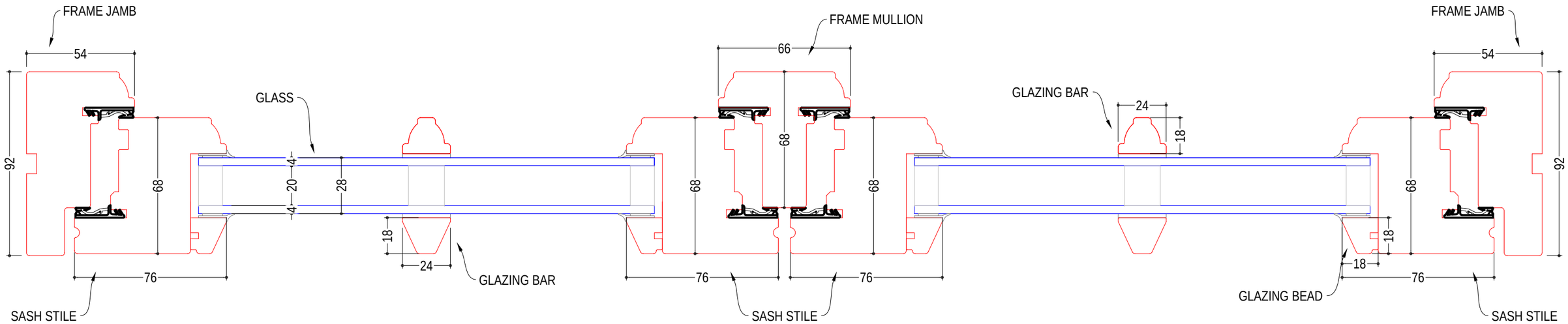

EXTERNAL

DRAWING:	FLUSH WINDOW HORIZONTAL SECTION			NOTES:	1:
SCALE @ A3:	1:2	PROJECT REF:	SECTION DRAWINGS		2:
VIEW FROM:	-	PROJECT #:	1000		3:
SITE:	Y	DATE:	25.10.2017		4:
REVISION:	A	STATUS:	WORKING DRAWING		5:
DRAWING #:	01	DRAWN BY:	MARSHALL		6:

INTERNAL

EXTERNAL

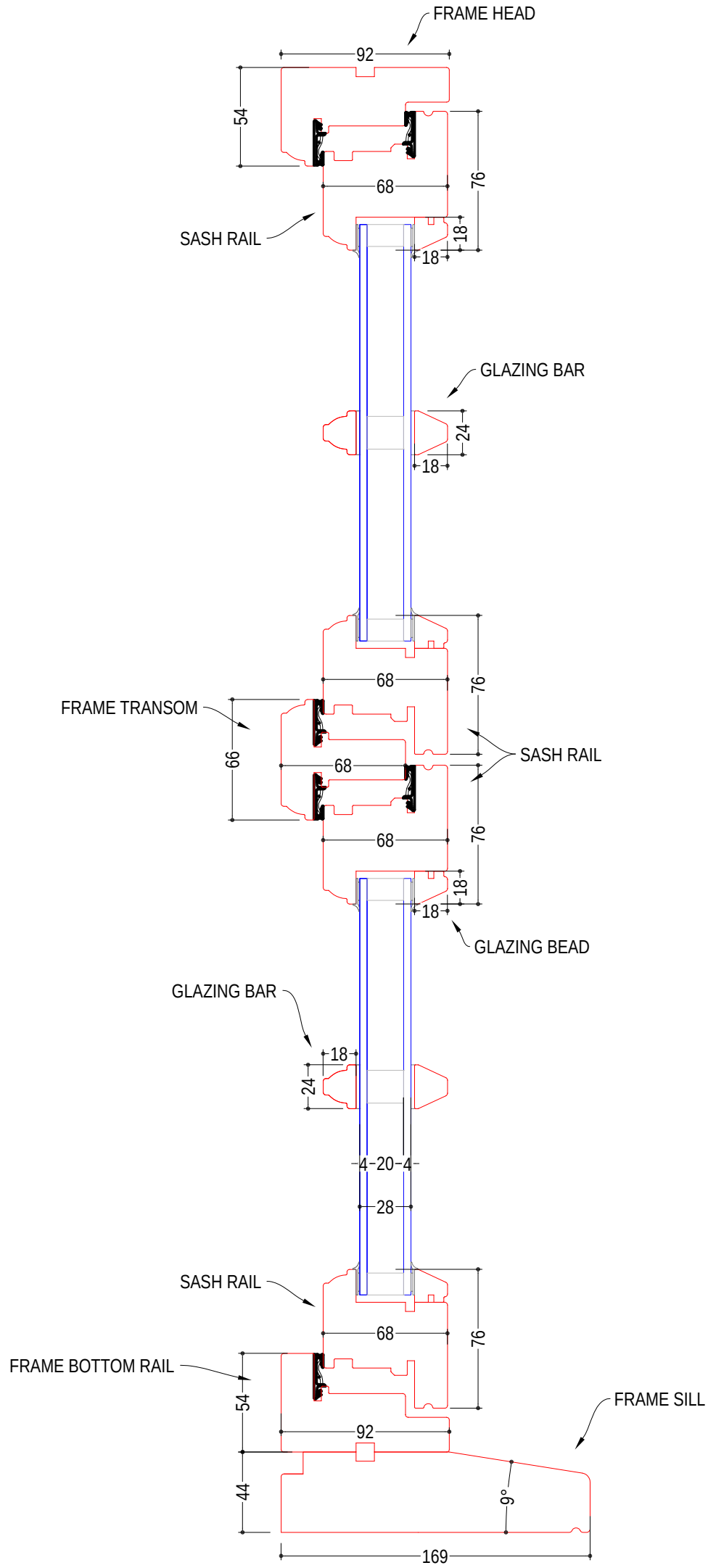

DRAWING:	FLUSH WINDOW VERTICAL SECTION			NOTES:	1:
SCALE @ A3:	1:3	PROJECT REF:	SECTION DRAWINGS		2:
VIEW FROM:	-	PROJECT #:	1000		3:
SITE:	Y	DATE:	25.10.2017		4:
REVISION:	A	STATUS:	WORKING DRAWING		5:
DRAWING #:	02	DRAWN BY:	MARSHALL		6:

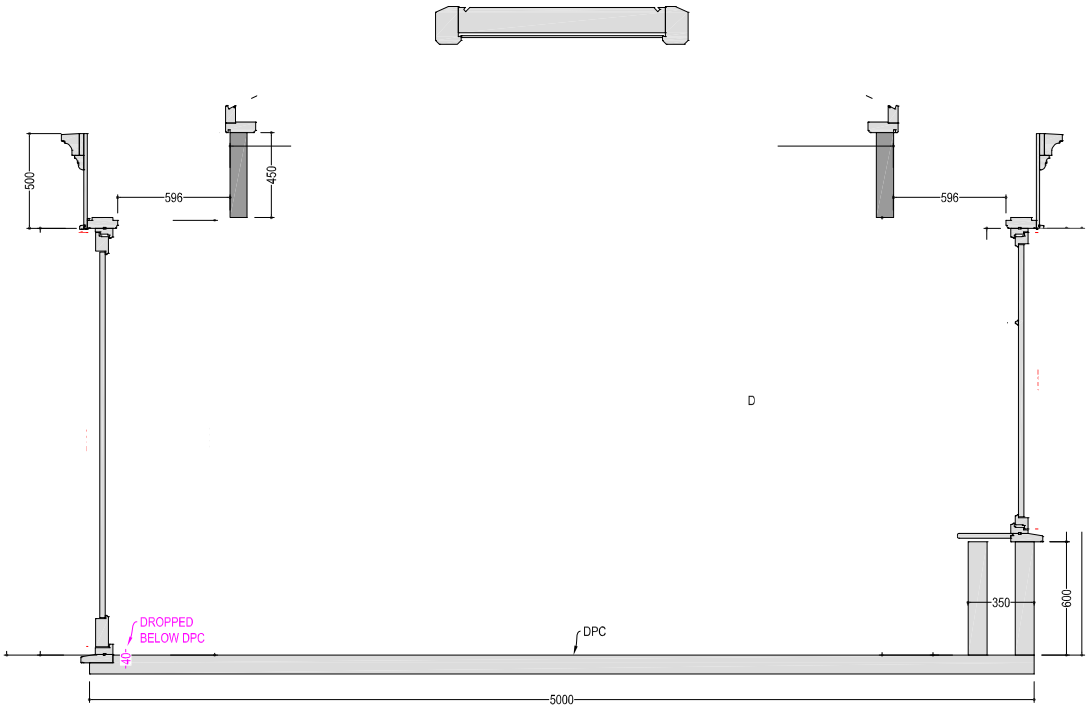

DRAWING:	OVERALL VERTICAL CROSS SECTION 2		
SCALE @ A3:	1:20	**PROJECT REF:**	DOMINIKA - JIA LING
VIEW FROM:	-	**PROJECT #:**	21256
SITE:	Y	**DATE:**	29.09.22
REVISION:	A	**STATUS:**	WORKING DRAWING
DRAWING #:	08	**DRAWN BY:**	JASON BADCOCK

NOTES:

1:	DOORS OPEN OUT.
2:	DIMENSIONS IN RED ARE SASH / DOOR LEAF SIZES.
3:	ALSO SEE DOOR THRESHOLD CROSS SECTION DRAWING.
4:	
5:	
6:	