© **DSA** 2018
Do not scale the drawing.
Dimensions to be checked not scaled.

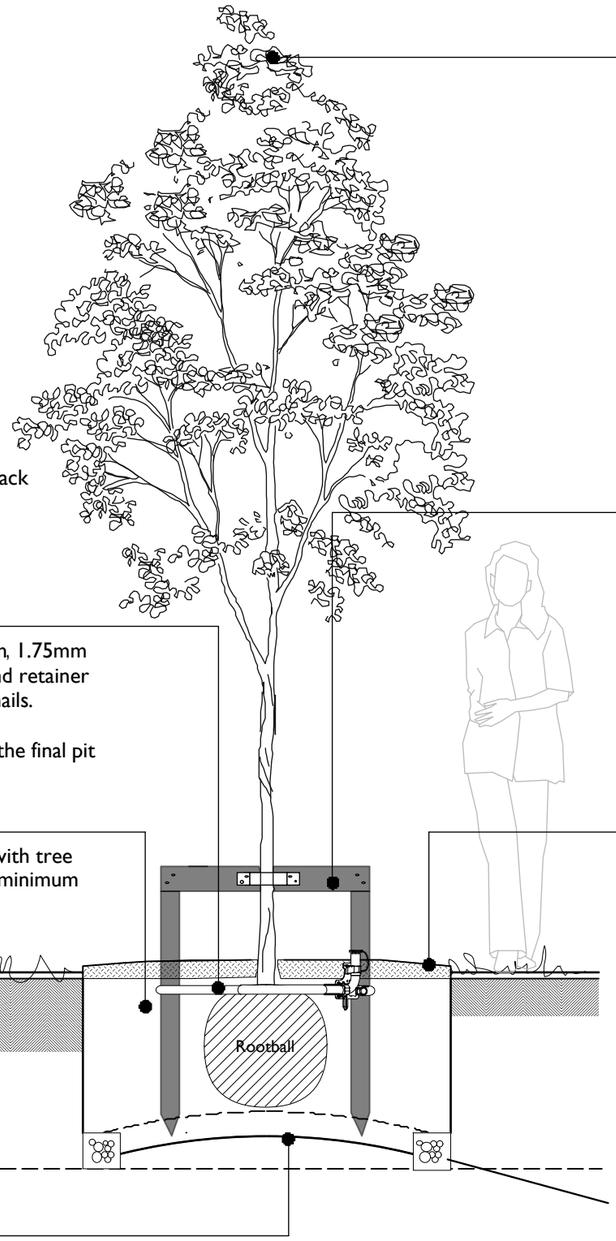

SECTION

Specimen tree -
Size and species as specified. Fitted with pest protection and strimmer guards where necessary. Refer to proposals.

Timber -
All visible timber to be stained, two coats, black to achieve a neat finish.

Stakes -
2nr 75mm square section softwood timber, firmly driven into side of pit and at least 100mm clear of rootball. All stakes to be at a uniform angle and orientation.

Firmly fix a crossbar to each stake with coach screws not nails. Crossbar is to be set low at 400mm above finished ground level.

Tree firmly fixed to stake with 38mm rubber spacer and buckle tie.

Irrigation -
Greenleaf Root Rain 'Metro' *(RRPC2A)*, 35mm, 1.75mm long irrigation pipe system with metal cap and retainer chain. Fix neatly to stake with 2 galvanised nails.

Ensure inlet is installed **slightly proud** of the final pit surround. (Maximum 50mm)

Tree pit -
to accomodate entire root mass, backfilled with tree planting compost and soil mixture. 600mm minimum depth.

Bark Mulch -
As specified elsewhere, 75mm deep. In grassed areas note extent of mulched area (1500 diam circle) around plant stem.

Softworks treatment, refer to proposals.

Perforated drainage pipe. To be connected into surface water drainage system where necessary. Refer to Engineer's specification.

Base of pit -
broken up thoroughly and sides of pit forked to assist root development and drainage.

PLAN

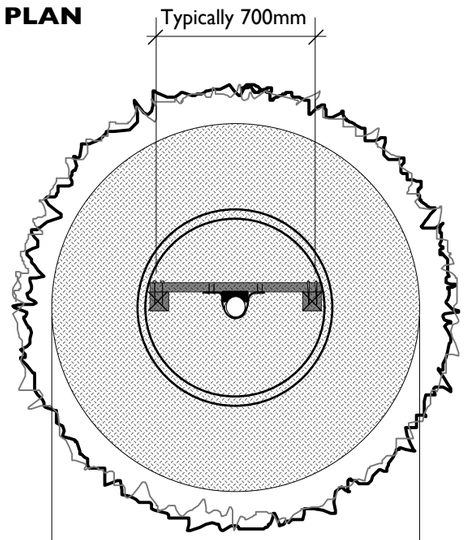

SPECIFICATION NOTES:
1. Tree tie and Irrigation suppler: Greenleaf ltd. The Old Dairy Croft Road Hastings, East Sussex TN34 3JN Tel. 01424 717797 / 01424 433233.
2. Stain: Sadolin 'Superdec' Opaque, Black. Crown Paints Ltd, Crown House, Hollins Road, Darwen, Lancs BB3 0BG. Tel. 0330 0240 298

NOTES:
1. To be read in conjunction with DSA plan drawings.

REVISIONS:
- Initial Issue: 28th November 2018.

AMESBURY GREGGS, WILTSHIRE

dsa-ed.co.uk
0115 9818 745

TYPICAL TREE PIT - 14-16 cmg in SOFT

1090 401 - 1:25@A3

DSA ENVIRONMENT & DESIGN