© **DSA** 2018
Do not scale the drawing.
Dimensions to be checked not scaled.

ASSEMBLY GUIDE

Cut six lengths of 20mm untreated timber to section specifications, drill 2mm pilot holes to prevent nails from cracking the timber. Drill 28mm hole in front timber section and screw a pre-drilled protective aluminum plate over the hole. Starting with the back panel nail the four other pieces of timber that make up the cradle of the bird box. Finally attach the adjustable lid by nailing a strip of used bike or car inner tube as a hinge.

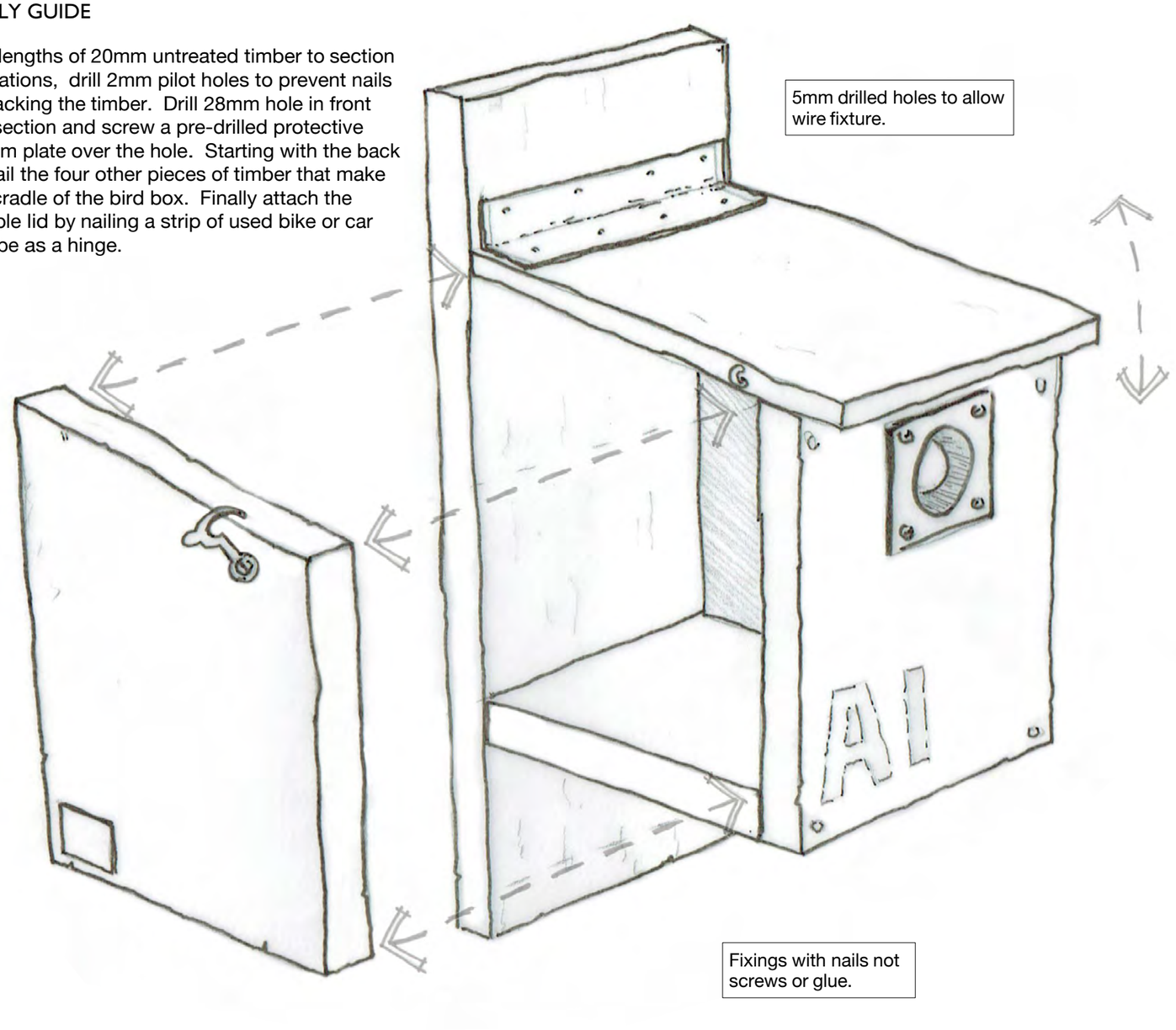

5mm drilled holes to allow wire fixture.

Fixings with nails not screws or glue.

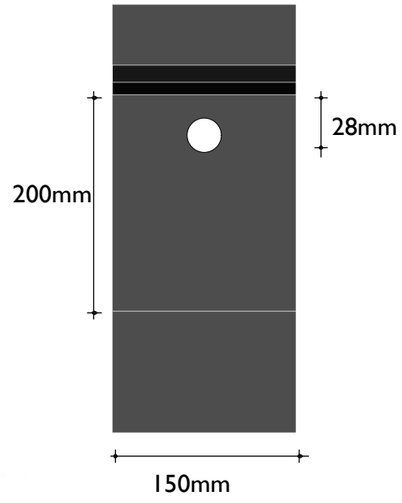

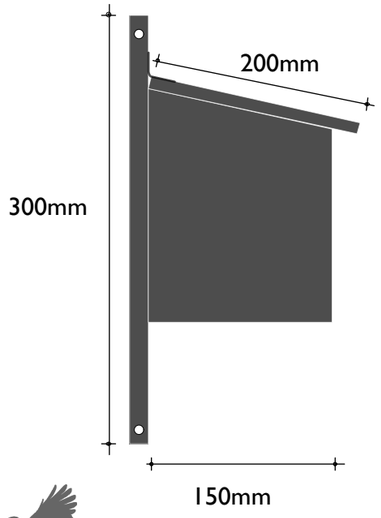

SECTIONS @ 1:5

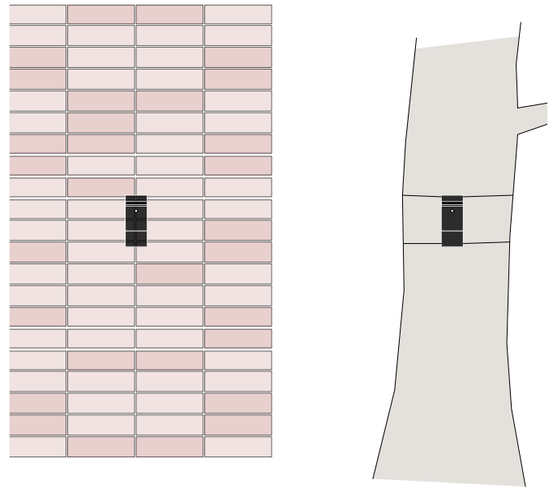

FIXTURE @ 1:10

Secured with two lengths of 1mm galvanized wire and a single aluminum tree friendly nail at the rear to prevent slippage.

DESCRIPTION

BIB28 bird box designed by DSA following guidance from British Ornithology field guide 23. Painting identification numbers on each box allows efficient monitoring of success of each box. BIB28 is designed for species such as Great tits, Tree sparrow and Pied flycatcher.

NOTES:
1. To be read in conjunction with DSA plan drawings.

REVISIONS:
- Initial Issue: 28th November 2018.

AMESBURY GREGGS, WILTSHIRE
dsa-ed.co.uk
0115 9818 745

BIB28 BIRD BOX DETAILS

1090 301 - NTS@A3

DSA ENVIRONMENT & DESIGN