Data sheet
Cableways

J515

Proludic

4+

1

1m

1 = 6,11m
2 = 3,34m
3 = 3,3m

Motor inclusion
Sensory inclusion
Mental inclusion



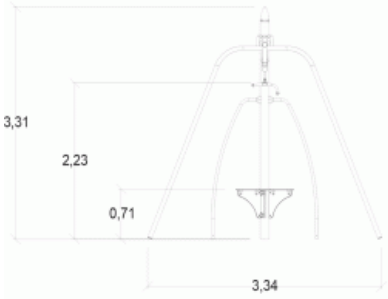

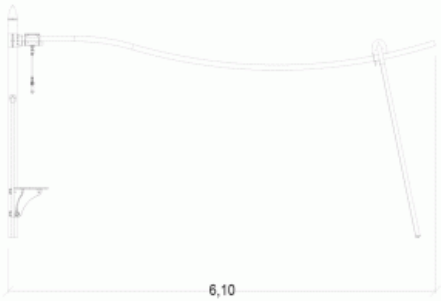

Play value : 3

sliding	meeting	getting across
x1	x1	x1

Installation of equipment

IMPORTANT: It is essential to refer to the installation instructions for information on the size of the safety areas.

Impact area (minimum normative surface)

Free space

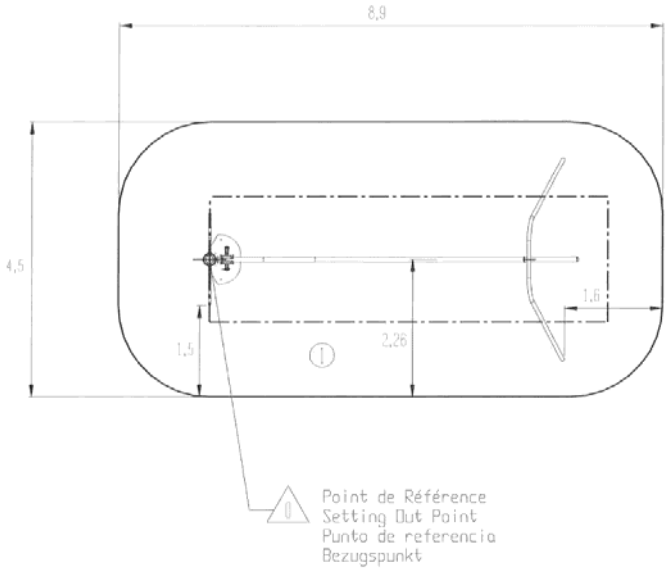

1	1m	39m²

2 | 10h00 | 0.2m³ | 39m² | 116kg | 41kg | EN 1176

Data sheet
Slides

J1012

1-5

5

1m

1 = 1,75m
2 = 0,46m
3 = 1,3m

Motor inclusion
Sensory inclusion
Mental inclusion

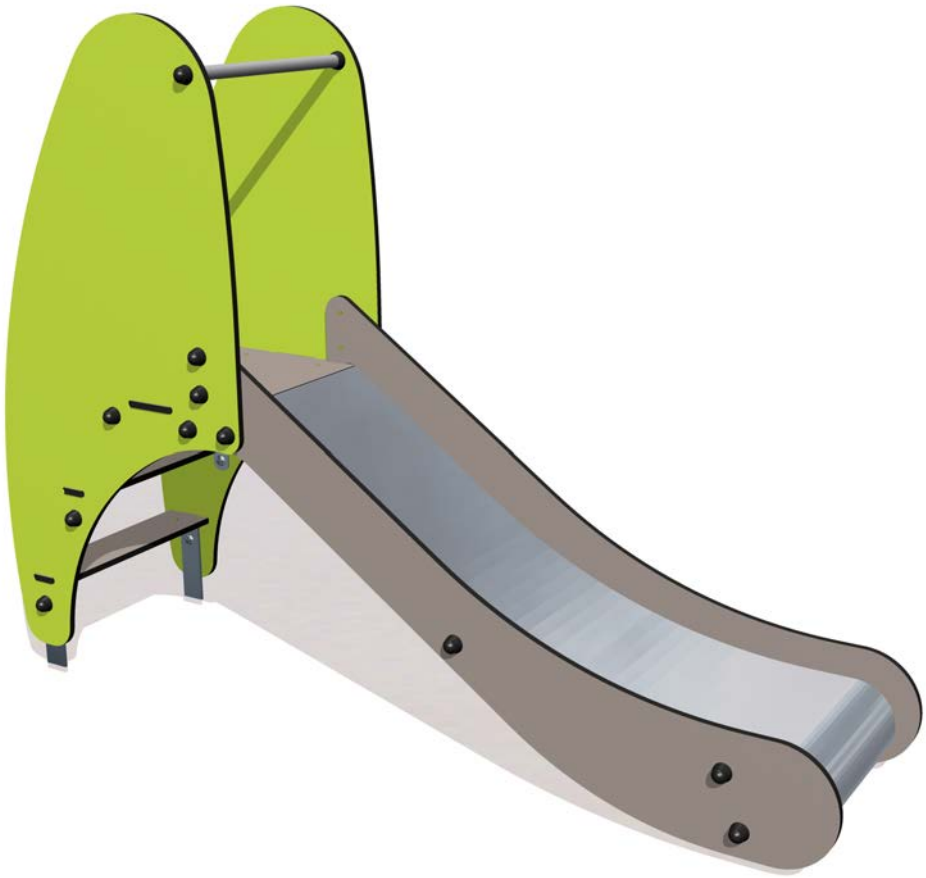

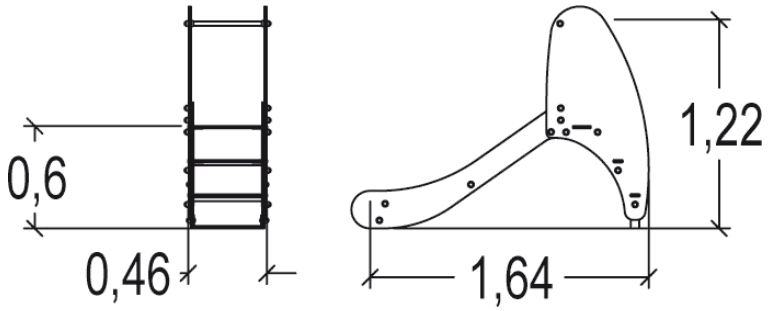

Play value : 3

sliding	meeting	climbing
x1	x1	x1

Installation of equipment

IMPORTANT: It is essential to refer to the installation instructions for information on the size of the safety areas.

Impact area (minimum normative surface)

Free space

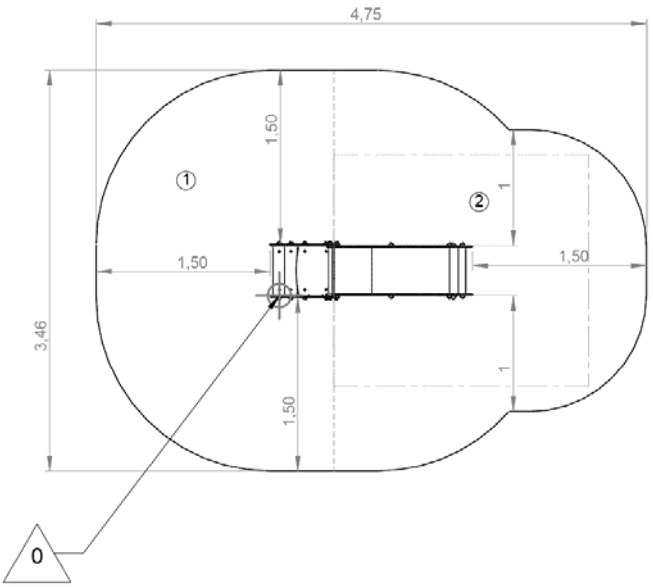

1	0,6m	6,5m²
2	1m	7,5m²

2 | 20h00 | 0.1m³ | 14m² | 55kg | 11kg

EN 1176

Data sheet
Biibox

J45004

3+ | 10 | 2,9m

1 = 4,97m
2 = 3,46m
3 = 4m

Motor inclusion
Sensory inclusion
Mental inclusion



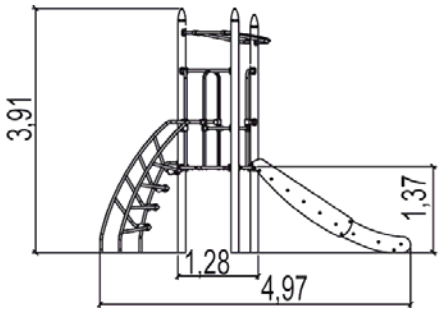

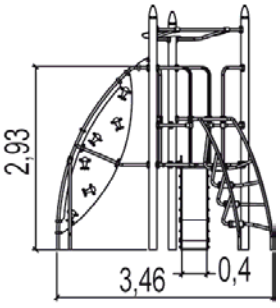

Play value : 5

climbing	sliding	meeting	taking shelter	climbing
x1	x1	x1	x1	x1

Data sheet
Biibox

J45004

Proludic

Components

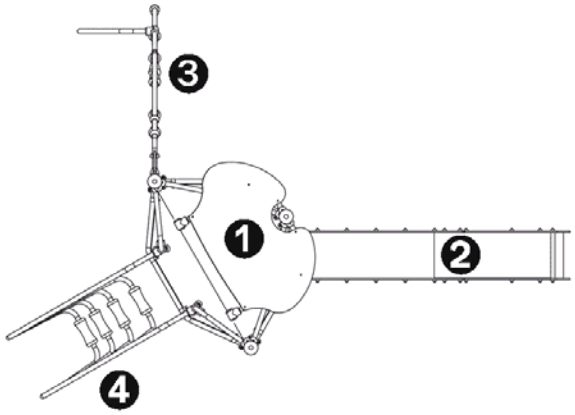

1. Tube platform - 3 posts HT: 1.37m
2. Stainless steel slide HT: 1.37m
3. Climbing wall
4. Curved staircase HT: 1.37m

Installation of equipment

IMPORTANT: It is essential to refer to the installation instructions for information on the size of the safety areas.

Impact area (minimum normative surface)

Free space

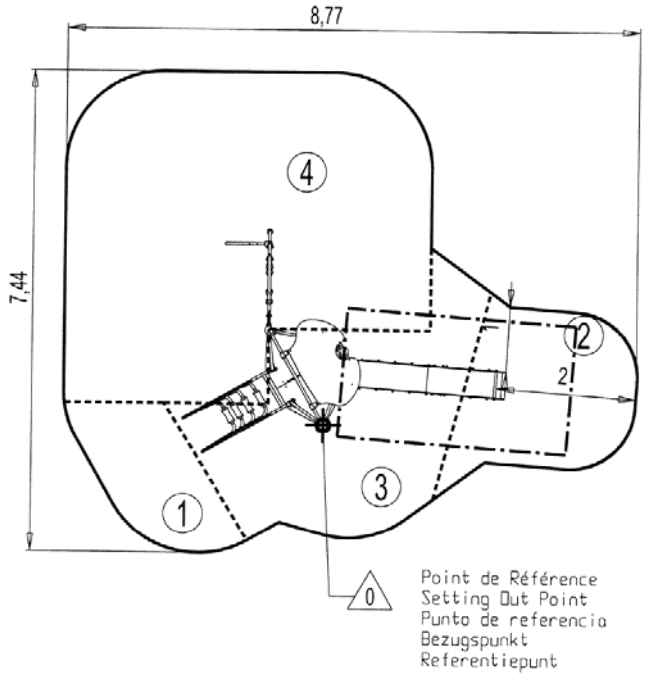

1	0,6m	4m²
2	1m	6,5m²
3	1,37m	11,5m²
4	2,9m	25m²

2	08h00	0.4m³	47m²	325kg	31kg

EN 1176

Data sheet
Climbing equipment

R48-IPY-702

3+

6

1,33m

1 = 1,6m
2 = 1,6m
3 = 2m

Motor inclusion
Sensory inclusion
Mental inclusion

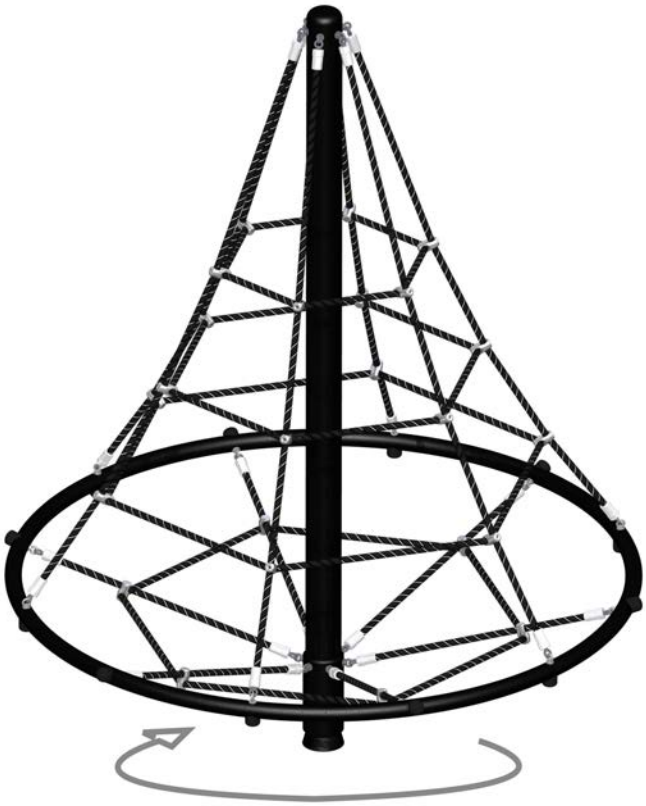

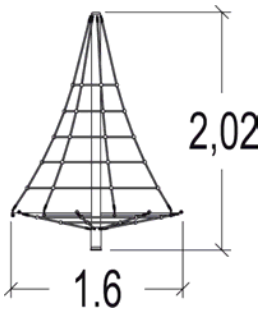

Play value : 4

meeting	balancing	rotating	climbing
x1	x1	x1	x1

Installation of equipment

IMPORTANT: It is essential to refer to the installation instructions for information on the size of the safety areas.

Impact area (minimum normative surface)

Free space

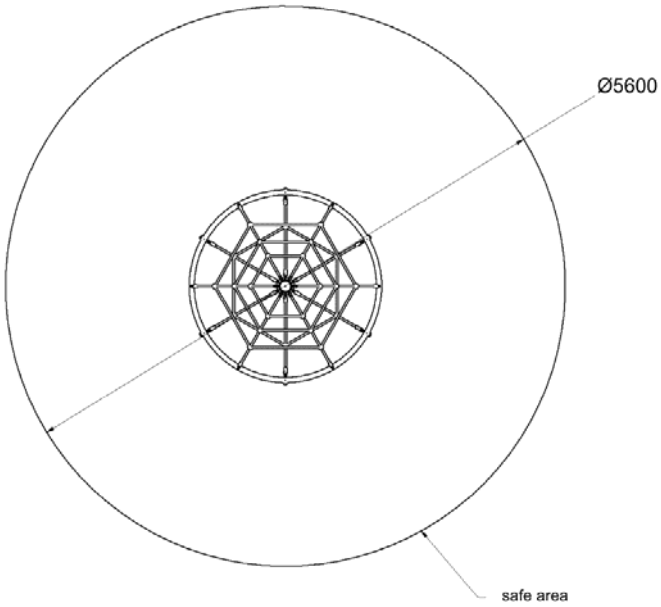

1	1,33m	25m²

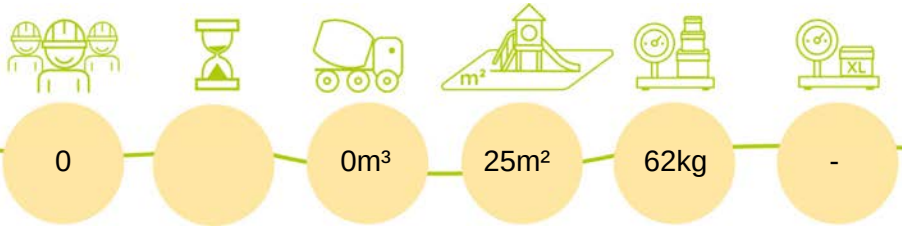

EN 1176

CHAUMONT

Furniture (bench, waste bin, shelter...)

RBA8



1=1.8m 2=0.63m 3=0.84m





INSTALLATION

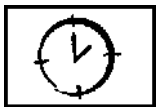

02h15

Total weight = 36 kg

Heaviest part = 0 kg

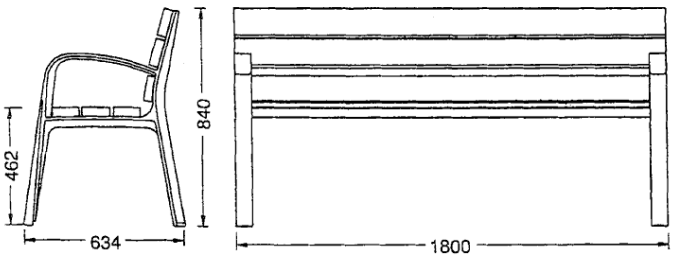

Data sheet
Swings

UKJ472-UK2023-46

Proludic

1+

9

1,55m

1 = 9,4m
2 = 1,2m
3 = 2,6m

Motor inclusion
Sensory inclusion
Mental inclusion



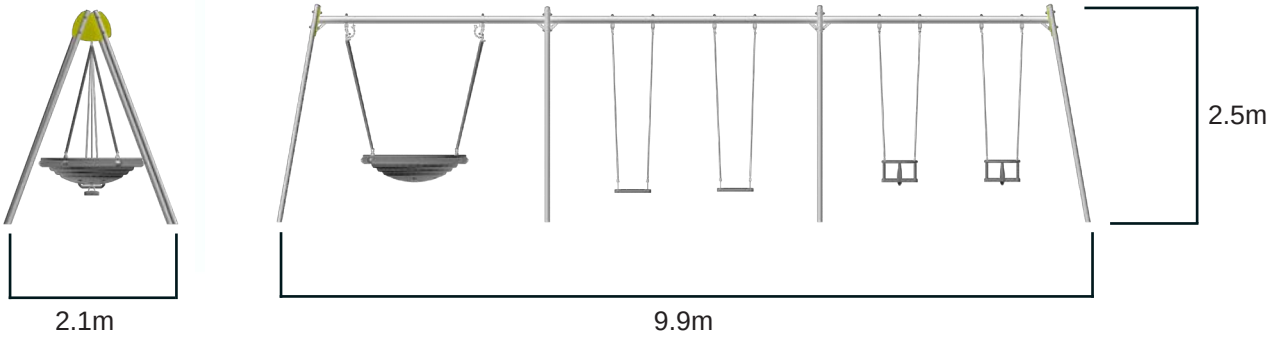

Play value : 2

meeting	swinging
x1	x1

UKJ472-UK2023-46

Proludic

Installation of equipment

IMPORTANT: It is essential to refer to the installation instructions for information on the size of the safety areas.

Impact area (minimum normative surface)

Free space

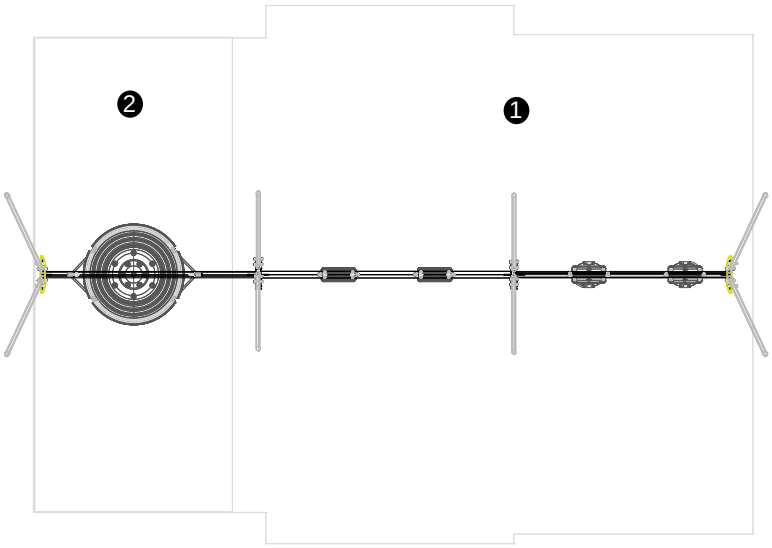

1	1,4m	45m2
2	1,55m	16m2

2	04h00	1.9m³	61m²	252kg	43kg

EN 1176