Data sheet
Swings

J441

2+

5

1,55m

1 = 3,37m
2 = 2,1m
3 = 2,6m

Motor inclusion
Sensory inclusion
Mental inclusion



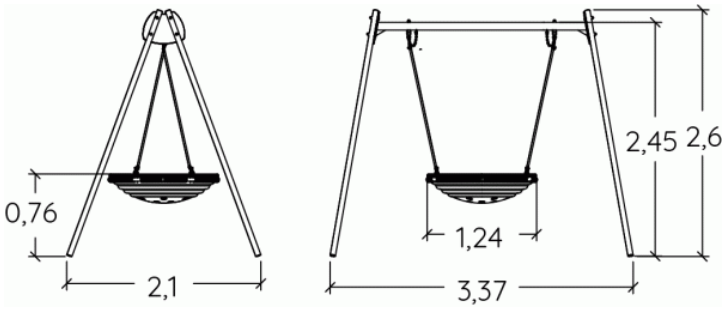

Play value : 3

meeting	resting	swinging
x1	x1	x1

Installation of equipment

IMPORTANT: It is essential to refer to the installation instructions for information on the size of the safety areas.

Impact area (minimum normative surface)

Free space

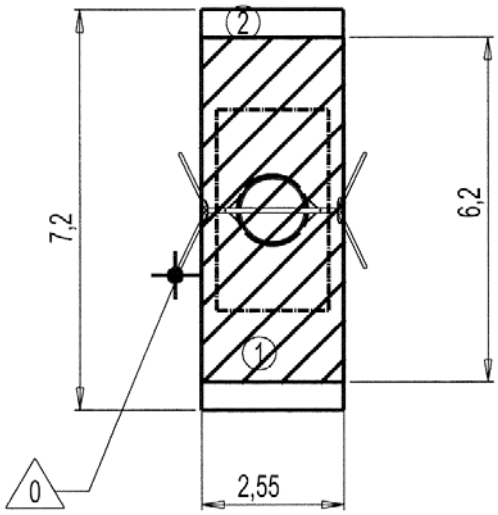

Point de Référence
Setting Out Point
Punto de referencia
Bezugspunkt
Referentiepunt

1	1,55m	16m²
2	1,55m	18,5m²

2	04h00	0.26m³	16m²	134kg	43kg

EN 1176

Data sheet
Swings

J473

1+

2

1,2m

1 = 3,2m
2 = 1,7m
3 = 2,2m

Motor inclusion
Sensory inclusion
Mental inclusion



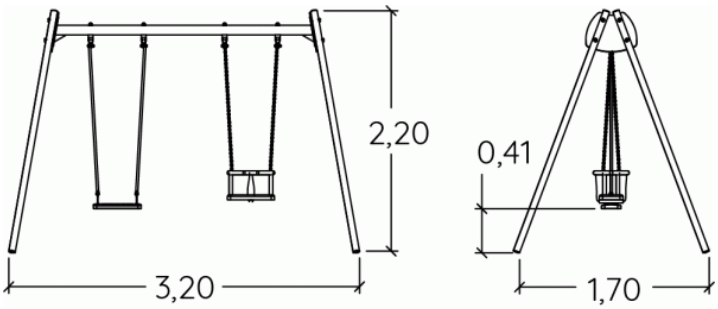

Play value : 3

meeting	resting	swinging
x1	x1	x1

Installation of equipment

IMPORTANT: It is essential to refer to the installation instructions for information on the size of the safety areas.

Impact area (minimum normative surface)

Free space

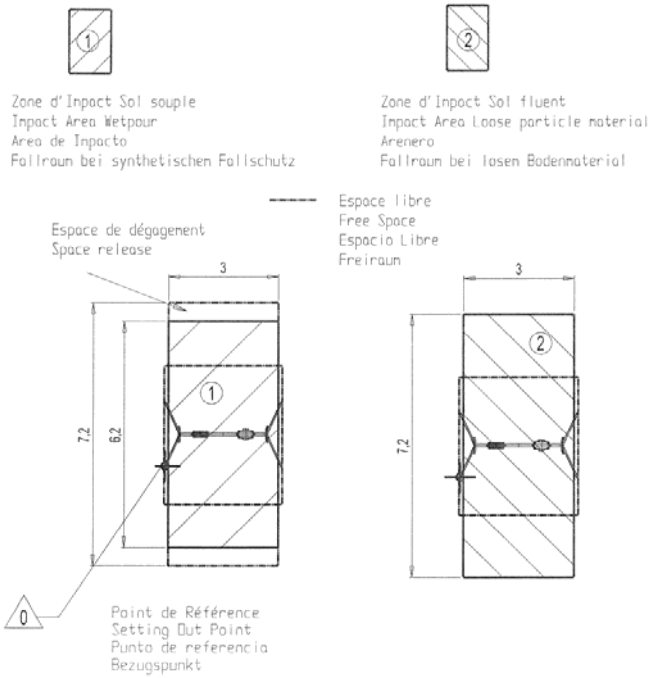

1	1,2m	19m²
2	1,2m	22m²

2	01h30	0.11m³	19m²	99kg	30kg

EN 1176

Data sheet
Springers

J819

2+ | 1 | 0,6m

1 = 0,97m
2 = 0,3m
3 = 0,85m

Motor inclusion
Sensory inclusion
Mental inclusion



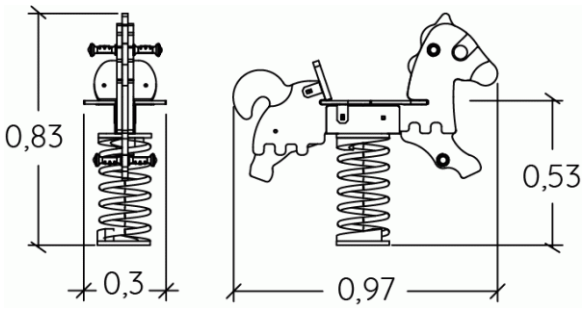

Play value : 3

role play	balancing	Oscillate
x1	x1	x1

Installation of equipment

IMPORTANT: It is essential to refer to the installation instructions for information on the size of the safety areas.

Impact area (minimum normative surface)

Free space

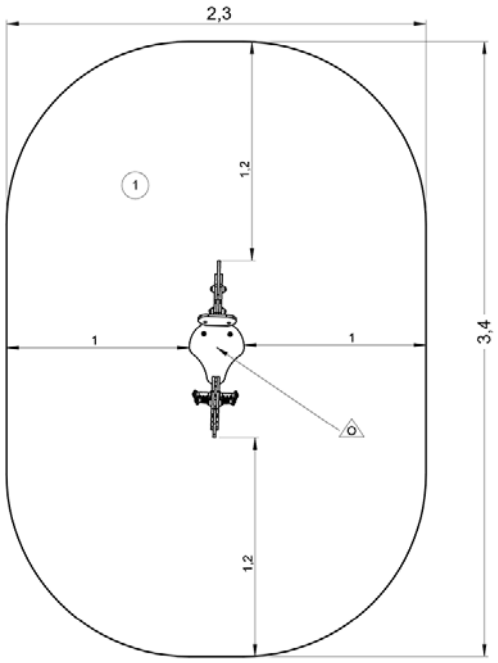

1	0,6m	7m²

1	01h15	0m³	7m²	30kg	10kg

EN 1176

Data sheet
Springers

J853

2+

4

0,75m

1 = 2,26m
2 = 0,29m
3 = 0,72m

Motor inclusion
Sensory inclusion
Mental inclusion

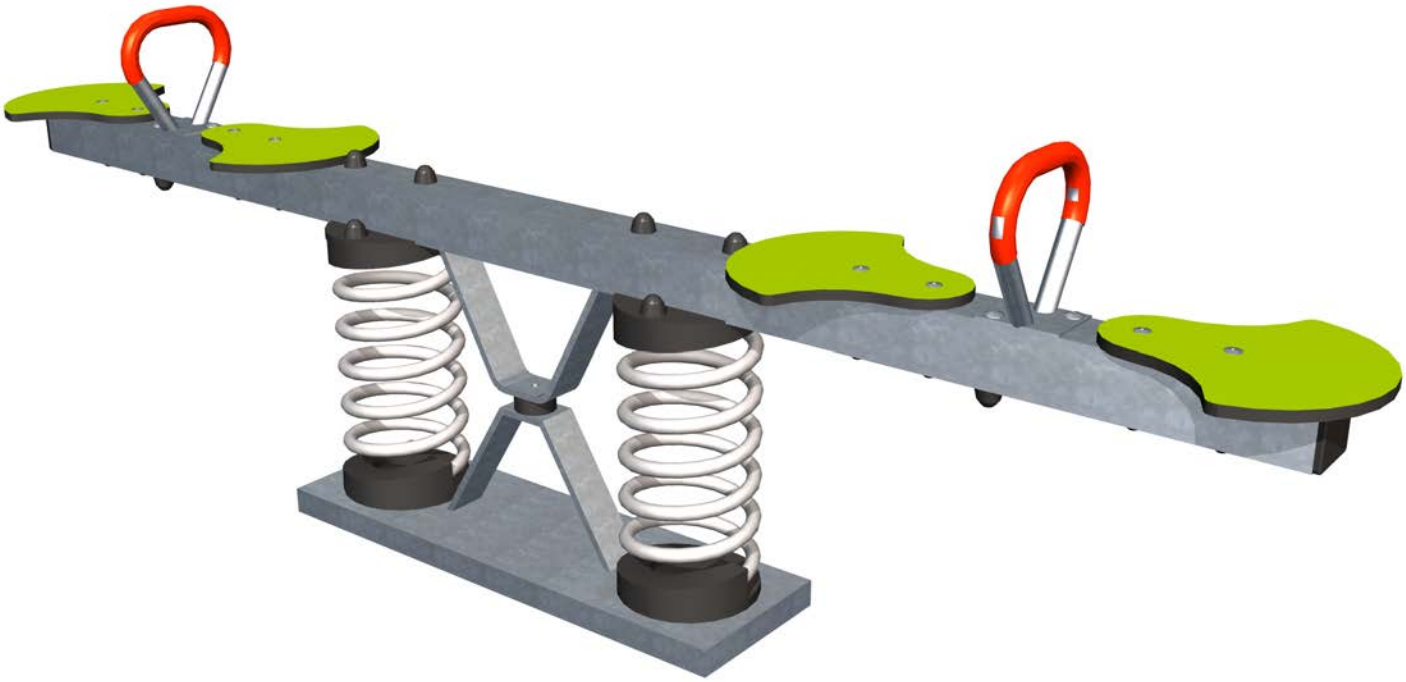

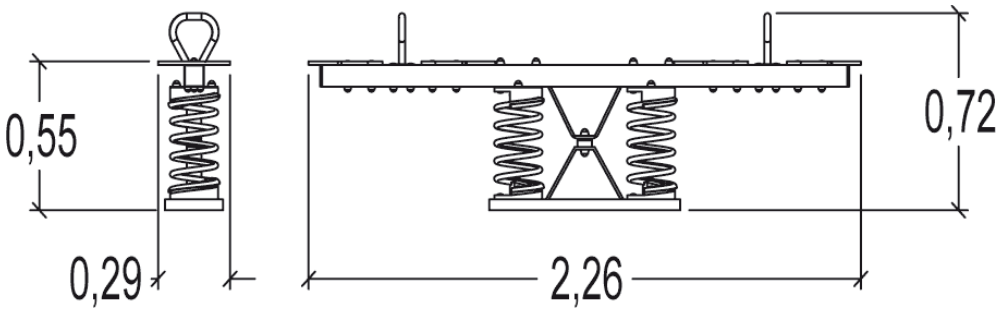

Play value : 4

role play	meeting	balancing	Oscillate
x1	x1	x1	x1

Installation of equipment

IMPORTANT: It is essential to refer to the installation instructions for information on the size of the safety areas.

Impact area (minimum normative surface)

Free space

1	0,75m	10m²

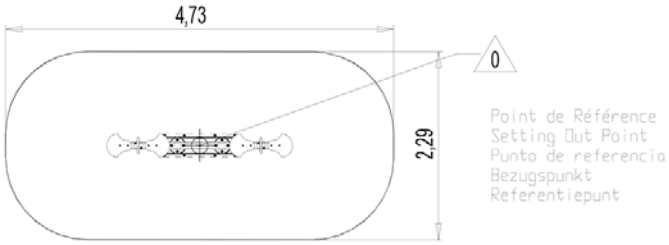

2		0m³	10m²	65kg	44kg

EN 1176

Data sheet
Rotating equipment

J2411

1+ | 1 | 1m

1 = 0,5m
2 = 0,48m
3 = 0,68m

Motor inclusion
Sensory inclusion
Mental inclusion



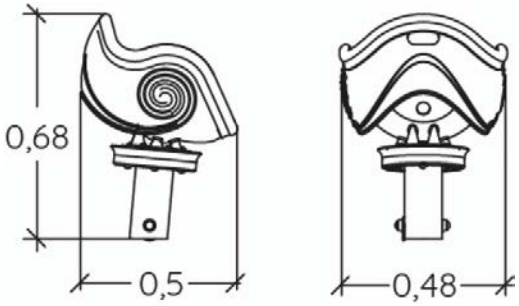

Play value : 4

meeting	resting	balancing	rotating
x1	x1	x1	x1

Installation of equipment

IMPORTANT: It is essential to refer to the installation instructions for information on the size of the safety areas.

Impact area (minimum normative surface)

Free space

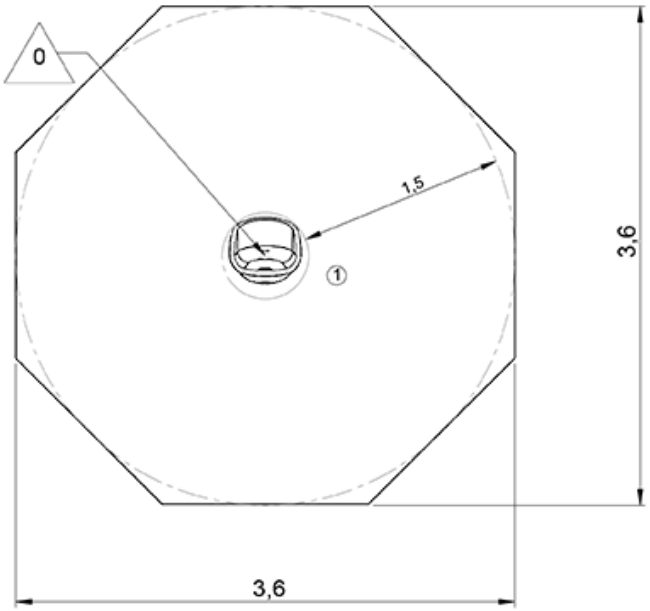

1	0,6m	11m²

2	01h45	0.04m³	11m²	21kg	21kg

EN 1176

Data sheet
Medieval

J2656M

2+

12

1,17m

1 = 5,66m
2 = 3,13m
3 = 3,02m

Motor inclusion
Sensory inclusion
Mental inclusion

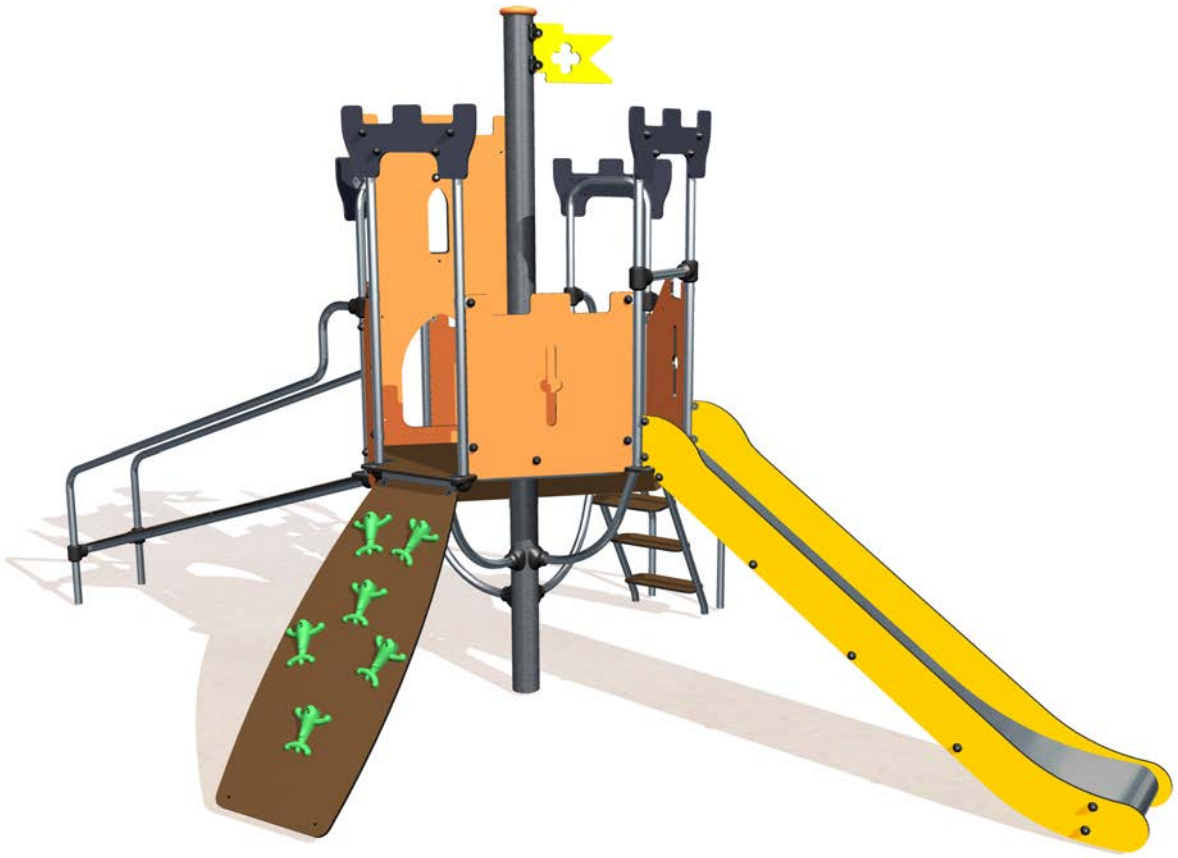

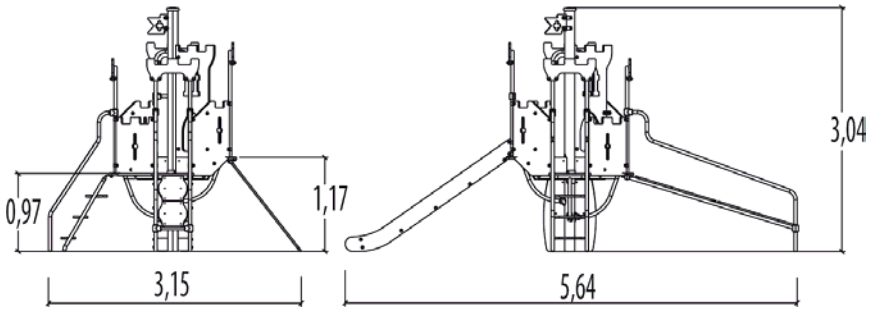

Play value : 7

climbing	role play	sliding	meeting	hiding	climbing	getting across
x1	x1	x1	x1	x1	x1	x1

Components

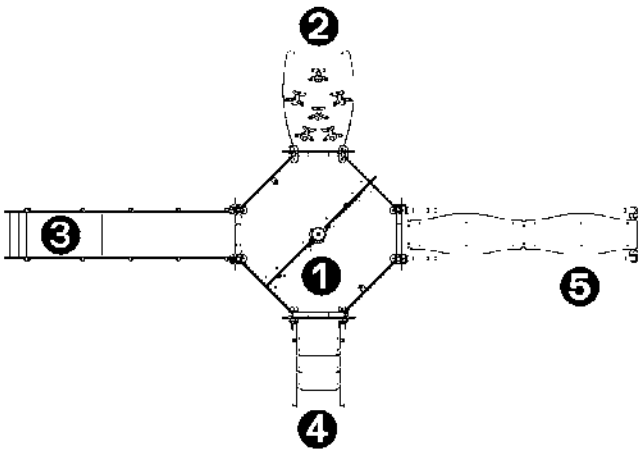

1. Plate-forme Castello
2. Slope
3. Toboggan H : 1,17 m
4. Stairs HT: 1.17m
5. Flexible bridge

Installation of equipment

IMPORTANT: It is essential to refer to the installation instructions for information on the size of the safety areas.

Impact area (minimum normative surface)

Free space

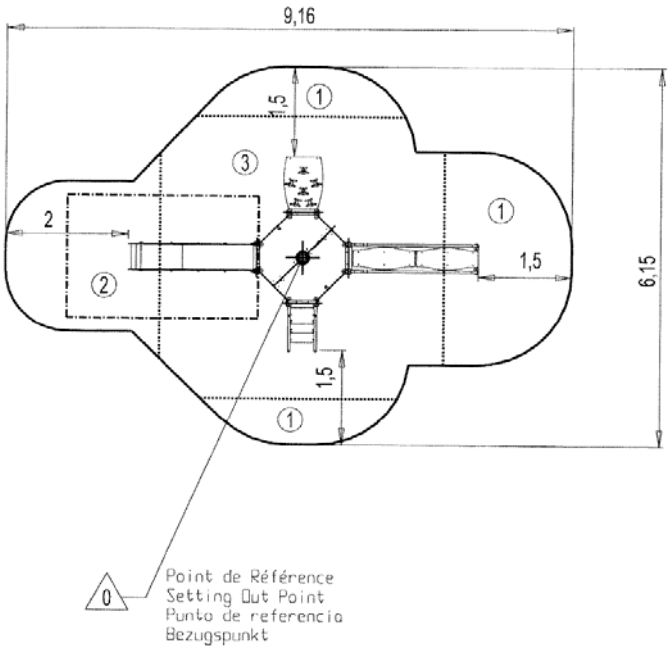

1	0,60m	10,5m²
2	1,00m	6m²
3	1,17m	20,5m²

2	11h30	0.4m³	36m²	293kg	28kg

EN 1176

Data sheet
Fun panels & Sound and musical games

J3417

1+ | 2 | 0m

1 = 1,15m
2 = 0,06m
3 = 1,45m

Motor inclusion
Sensory inclusion
Mental inclusion

Installed on G3423/G3426 posts



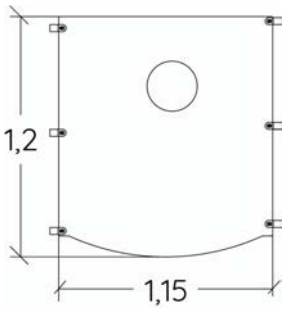

Play value : 3

role play	meeting	visual stimulation
x1	x1	x1

Installation of equipment

IMPORTANT: It is essential to refer to the installation instructions for information on the size of the safety areas.

Impact area (minimum normative surface)

Free space

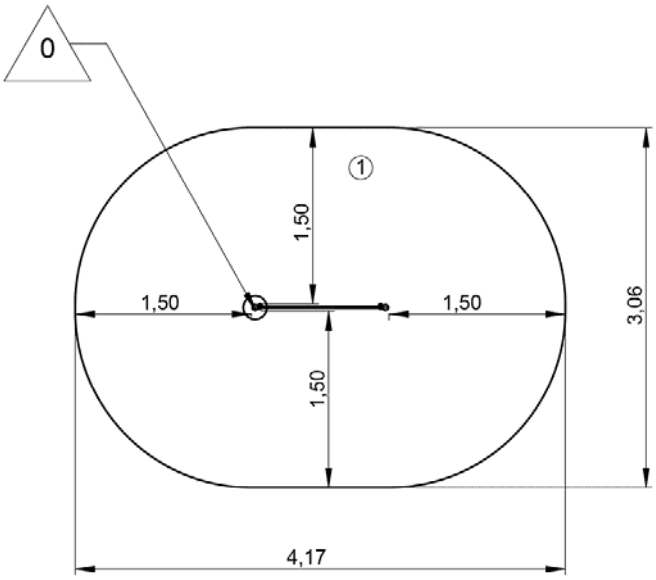

1	0m	11m²

Data sheet
Biibox

J45004

3+ | 10 | 2,9m

1 = 4,97m
2 = 3,46m
3 = 4m

Motor inclusion
Sensory inclusion
Mental inclusion



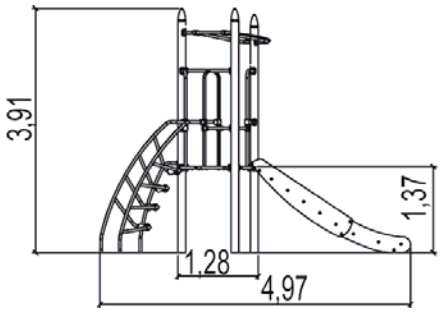

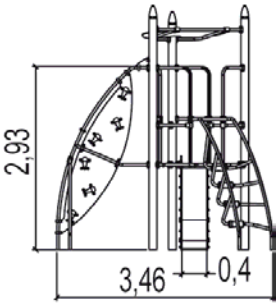

Play value : 5

climbing	sliding	meeting	taking shelter	climbing
x1	x1	x1	x1	x1

Data sheet
Biibox

J45004

Proludic

Components

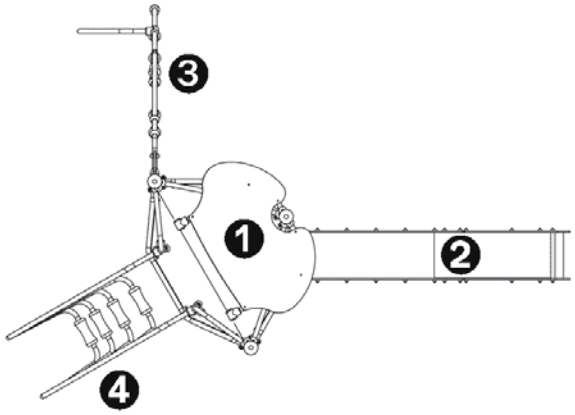

1. Tube platform - 3 posts HT: 1.37m
2. Stainless steel slide HT: 1.37m
3. Climbing wall
4. Curved staircase HT: 1.37m

Installation of equipment

IMPORTANT: It is essential to refer to the installation instructions for information on the size of the safety areas.

Impact area (minimum normative surface)

Free space

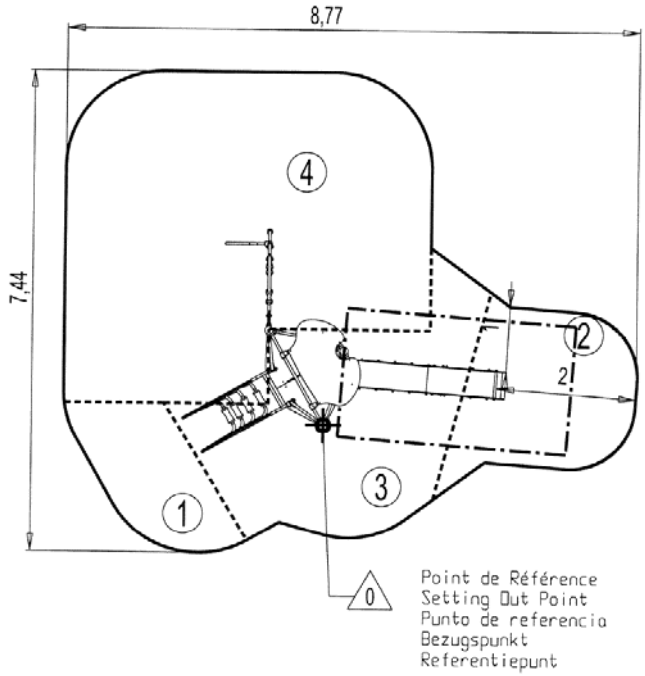

1	0,6m	4m²
2	1m	6,5m²
3	1,37m	11,5m²
4	2,9m	25m²

2	08h00	0.4m³	47m²	325kg	31kg

EN 1176

CHAUMONT

Furniture (bench, waste bin, shelter...)

RBA8



1=1.8m 2=0.63m 3=0.84m





INSTALLATION

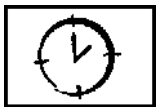

02h15

Total weight = 36 kg

Heaviest part = 0 kg

