DPO DESIGN

D Peter Oughtibridge

DPODESIGN.CO.UK

p.oughtibridge@btinternet.com

07748801306

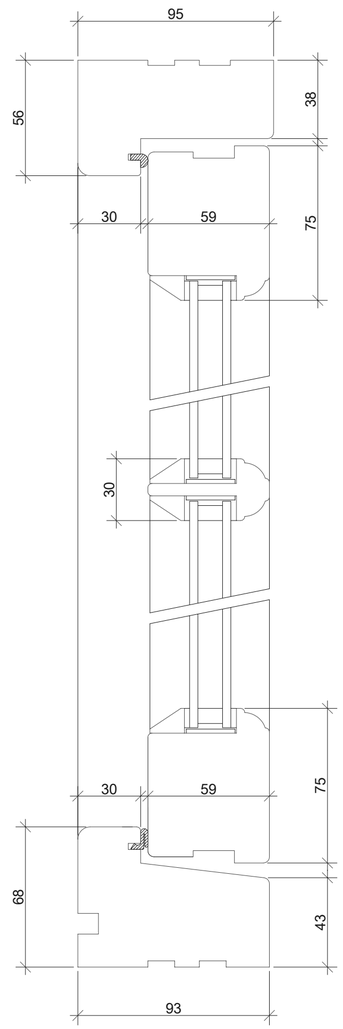

Vertical Section
Scale 1:2

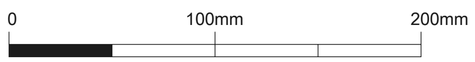

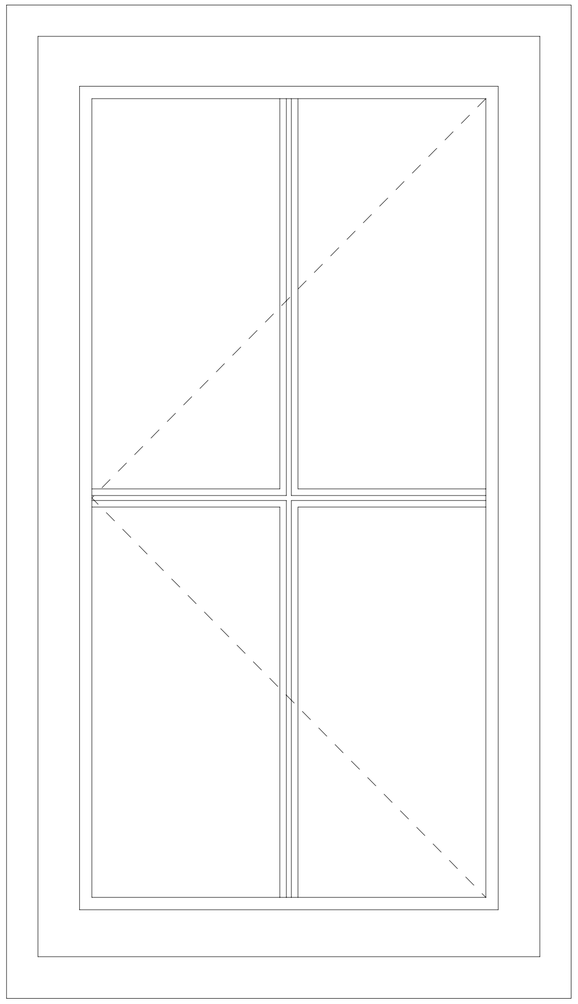

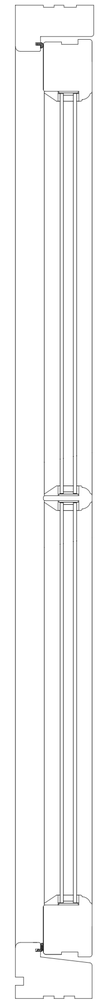

Proposed Windows Scale 1:5

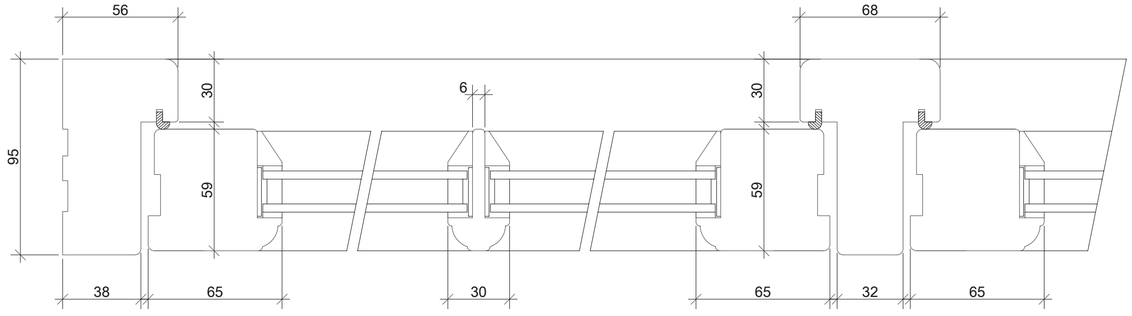

Horizontal Sections Scale 1:2

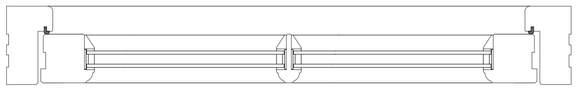



Proposed garage conversion and alteration at :-
Rosefield Cottage, Polebarn Road, Trowbridge Wiltshire BA14 7EQ.

For:
Mr D Morelli

Drawing:
Proposed Joinery.

Scale:
1:5, 1:2 @ A2.

Date:
June 2023.

Drawing Number:
RCH - GP - 04A.

Revisions:
A - Sept 2023 - details updated/corrected.