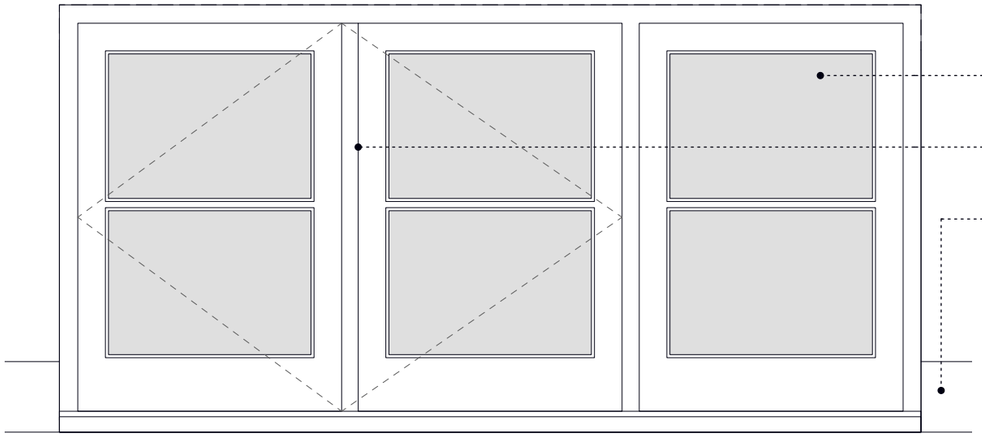

Elevation of W-32
1:10@A3



Internal photo of W-32



External photo of W-32

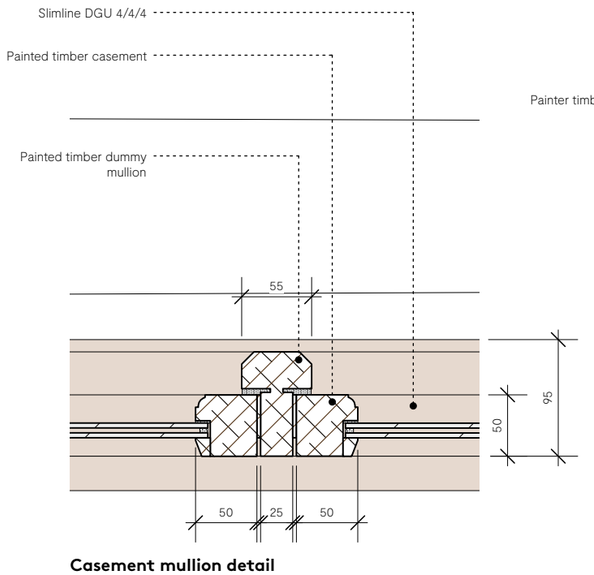

Casement mullion detail
1:5@A3

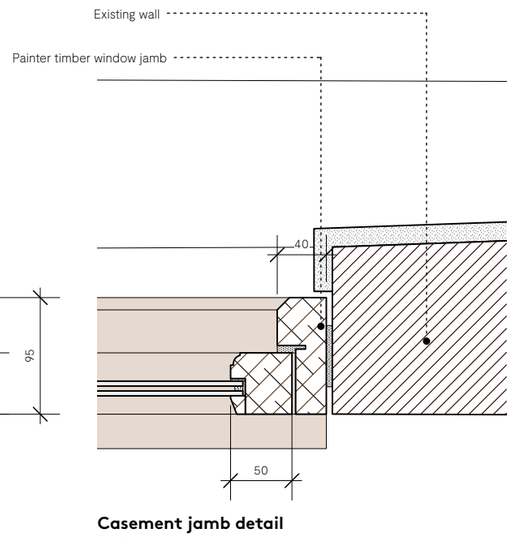

Casement jamb detail
1:5@A3

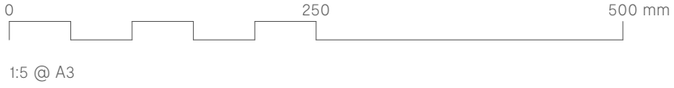

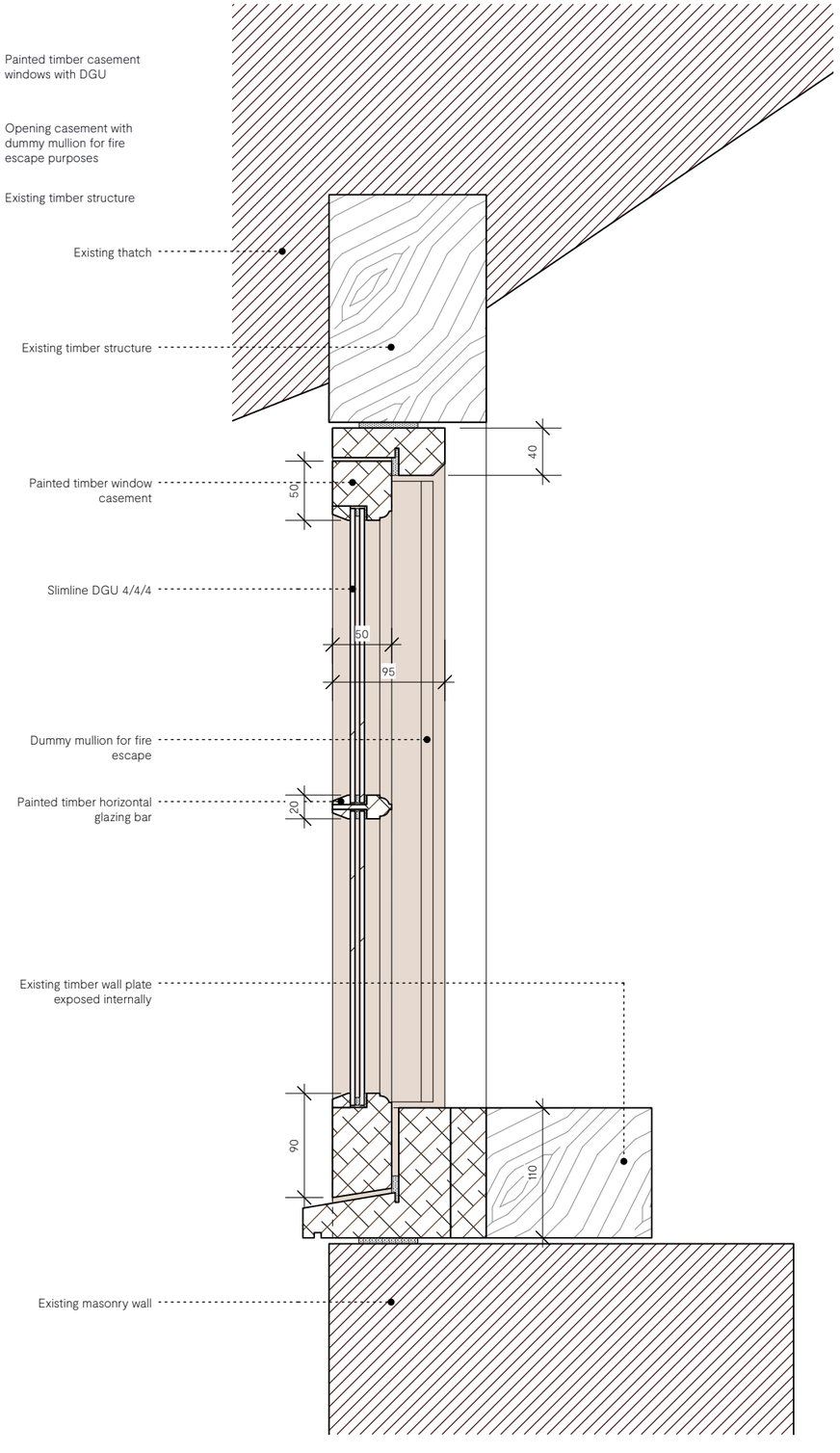

Section detail
1:5@A3

PLANNING & LISTED BUILDING CONSENT Notes

A. All Drawings to be read in conjunction with supporting Design & Heritage Statement
B. Do not scale from this drawing use figured dimensions only. All dimensions are to be checked on site.
C. Contractor to report any discrepancies, drawing errors and omissions to Chalk Architects immediately
D. All structural elements to Structural Engineer's details and specifications
E. All work subject to Listed Building Consents & Planning Approval including conditions issued by Local Planning Authority
F. All work to comply with guidance within relevant UK Building Regulations Approved Documents
G. All work subject to the Party Wall Act etc 1996.

SCHEDULE OF EXISTING WINDOWS TO BE REPLACED

Painted timber casement windows with DGU and glazing bars as shown on elevations:

W-01	TYPE 1 -	Replacement 2-light window in masonry wall
W-02	TYPE 1 -	Replacement 2-light window in masonry wall
W-06	TYPE 1 -	Replacement 4-light window in masonry wall
W-13	TYPE 1 -	Replacement stable door and side window in masonry wall
W-21	TYPE 1 -	Replacement 2-light window in masonry wall
W-22	TYPE 2 -	Replacement 3-light window in dormer
W-23	TYPE 2 -	Replacement 3-light window in dormer
W-24	TYPE 2 -	Replacement 1-light window in dormer
W-25	TYPE 2 -	Replacement 1-light window in dormer
W-26	TYPE 2 -	Replacement 3-light window in dormer
W-27	TYPE 2 -	Replacement 3-light window in dormer
W-30	TYPE 2 -	Replacement 1-light window in dormer
W-31	TYPE 3 -	Replacement casement within existing frame
W-32	**TYPE 4 -**	**Replacement 3-light window in dormer**
W-33	TYPE 5 -	Replacement 2-light window in dormer

Refer to drawings P11, P12 and P13 for window elevations in context

Revision: Date: Reason:

RS3 - PLANNING & LBC

Apple Tree Cottage [SN8 3SR] **22-07-P17**

Window Details Type 4 - Proposed

Scale:	Paper size:	Date:	Drawn by:	Checked by
1:100	A3	05/09/2023	AM	JM

Chalk.

Chartered Practice No.20035647 www.chalkarchitects.co.uk hello@chalkarchitects.co.uk
© 2023. All Rights Reserved