© SIMON MORRAY-JONES. ALL DIMENSIONS TO BE CHECKED ON SITE BEFORE WORK COMMENCES. ANY DISCREPANCIES TO BE REPORTED TO THE ARCHITECT.

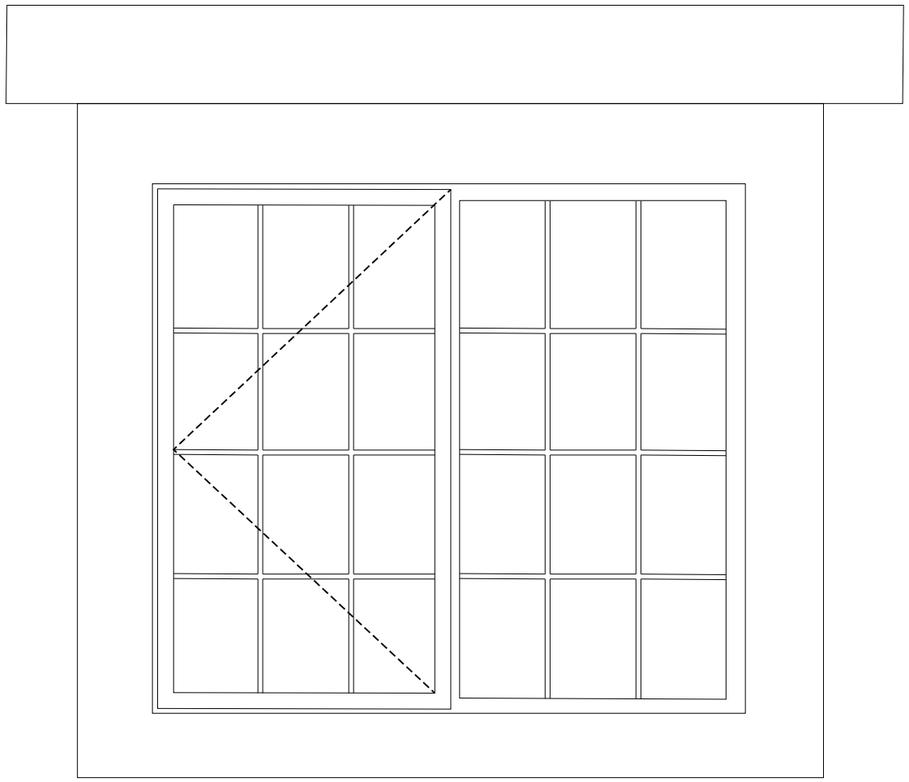

1:10 WG06 Elevation

Window to be painted metal frame with thin double glazed panes. Simulated lead detail to match the existing windows.

Supplier - Fabco/Metherm/Clement windows or similar.

0m 0.2m 0.4m

Scale: 1:10

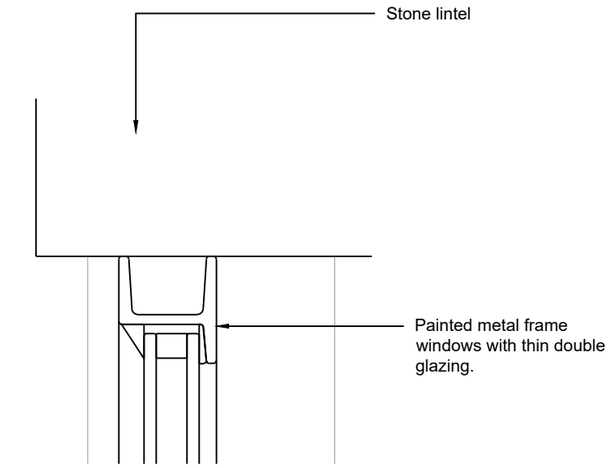

1:2 DG08 Head Detail

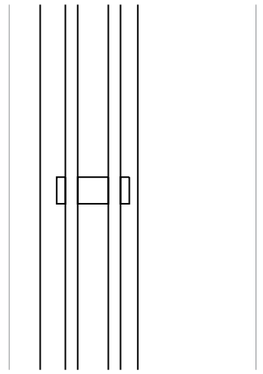

1:2 DG08 Lead bar detail

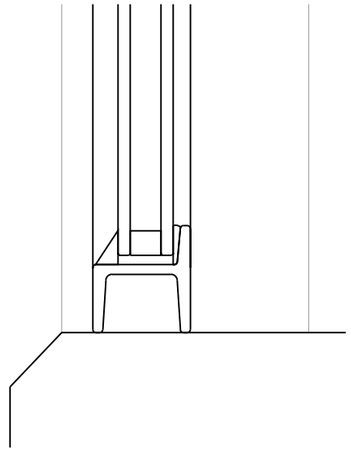

1:2 DG08 Cill Detail

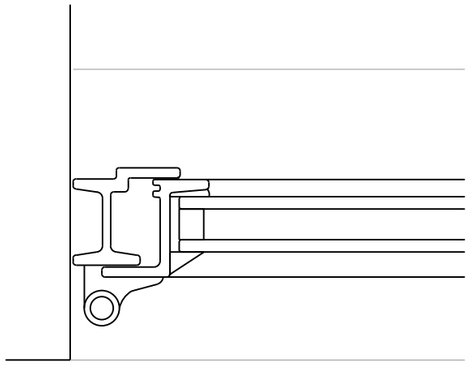

1:2 DG08 Jamb detail

0mm 40mm 80mm

Scale: 1:2

PLANNING

Revision	Date

SIMON MORRAY-JONES
CHARTERED ARCHITECTS & DESIGNERS
21 MILSOM STREET, BATH BA1 1DE
TEL: 01225 787900 FAX: 01225 787901
EMAIL: sm-j@sm-j.com

Client
Jason & Sarah Clarkin Yates

Project
St Olaves
Bradford on Avon

Drawing Title
Proposed
WG06 Details

Scale @ A3	Drawn By	Date
Varies at A3	SW	08/23

Job Number	Drawing Number	Revision
1315	PL22	